HUSABERG TE 300 2011

SPARE PARTS MANUAL: ENGINE

ART.NO.: 3CM084690KEN

ENGLISH

INDEX

ENGINE CASE

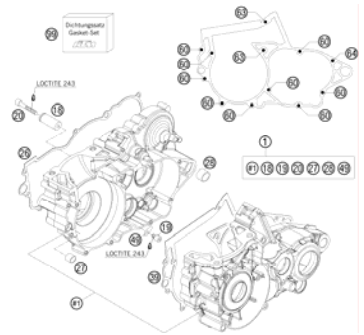

3

CLUTCH COVER

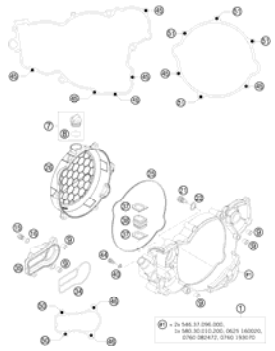

4

REED VALVE CASE

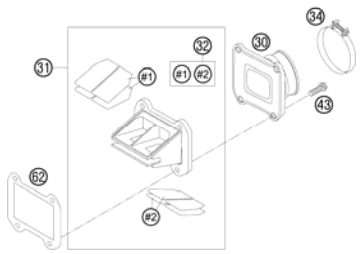

5

CYLINDER, CYLINDER HEAD

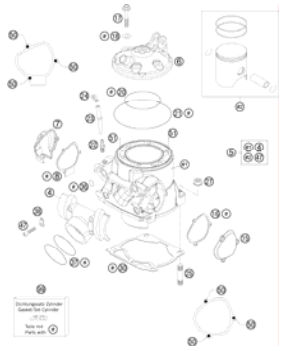

6

CRANKSHAFT, PISTON

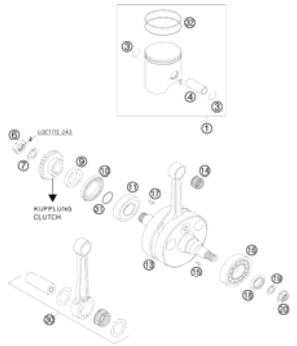

7

CARBURETOR

8

CLUTCH

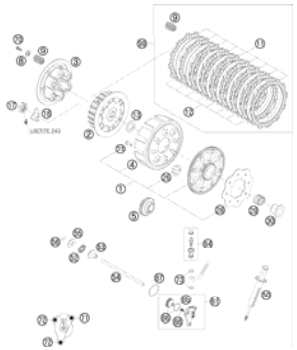

10

TRANSMISSION I - MAIN SHAFT

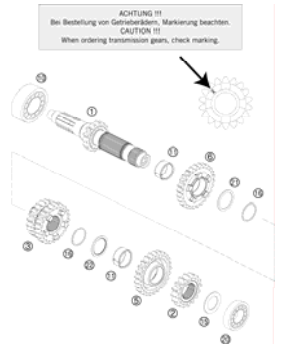

11

TRANSMISSION II - COUNTERSHAFT

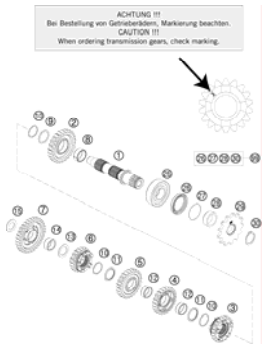

12

KICK STARTER

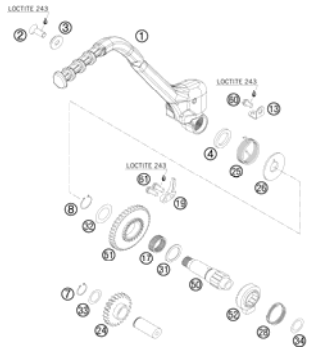

13

SHIFTING MECHANISM

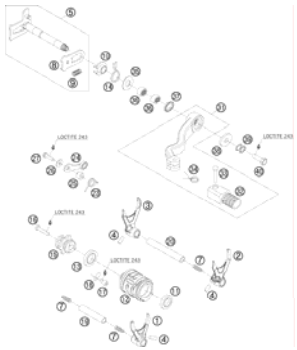

14

COOLING SYSTEM

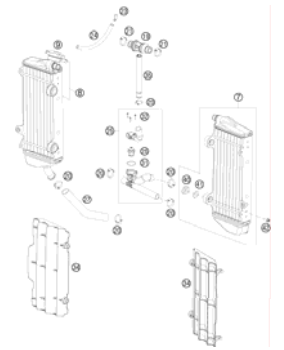

15

INDEX

EXHAUST CONTROL

16

IGNITION SYSTEM

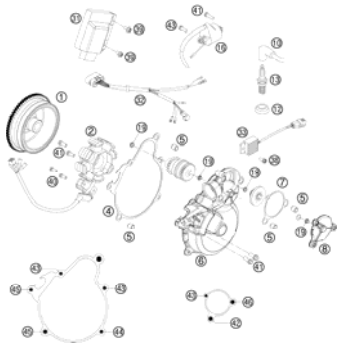

18

ELECTRIC STARTER

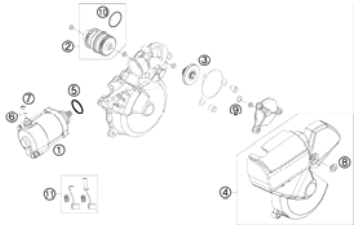

19

All information contained is without obligation. KTM-Sportmotorcycle AG particularly reserves the right to modify any equipment, technical specifications, prices, colors, shapes, materials, services, service work, constructions, equipment and the like so as to adapt them to local conditions or to cancel any of the above items, all without previous announcement and without giving reasons. KTM may stop manufacturing certain models without previous notice. KTM shall not be held liable for any deviations of availability and/or ability to deliver, illustrations, descriptions, printing and/or other errors. The illustrated models partly contain extra equipment, which is not applied to standard models.
© by KTM-SPORTMOTORCYCLE AG, Mattighofen AUSTRIA; All rights reserved; Reprint, also in extracts, with written allowance of KTM-SPORTMOTORCYCLE AG, Mattighofen only.

ENGINE CASE

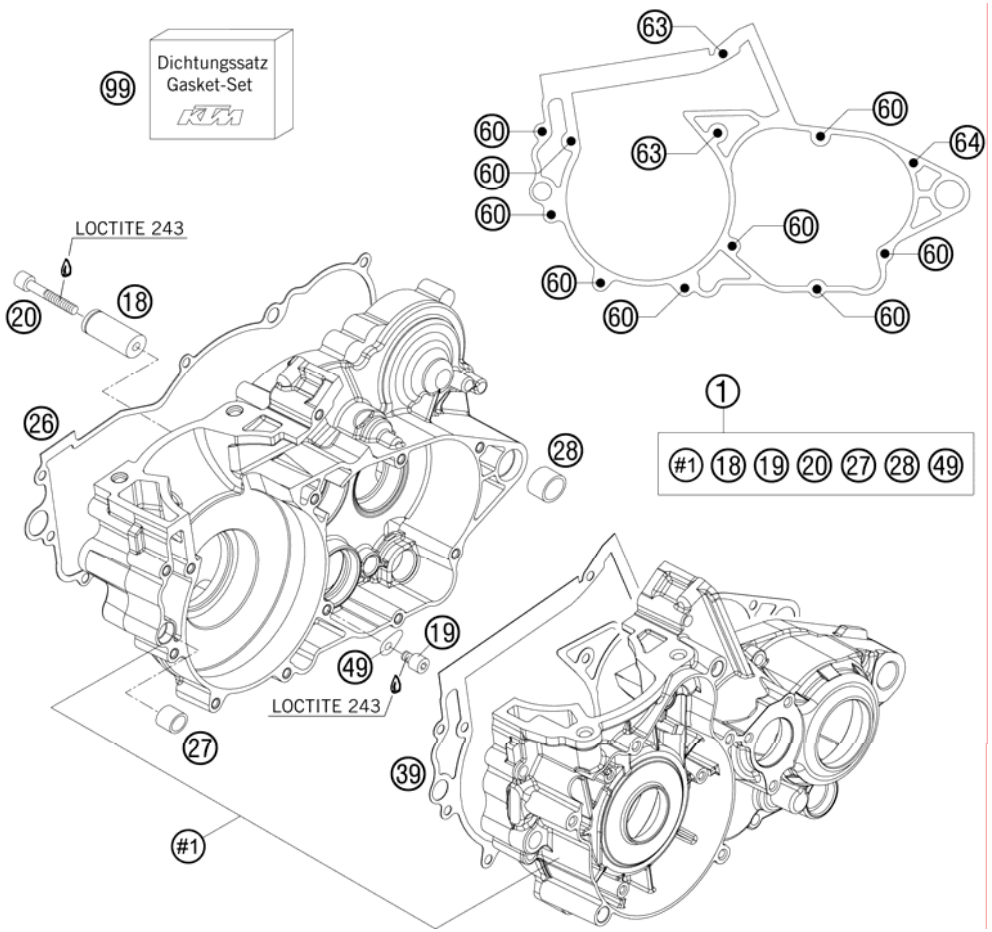

FIG	PART NUMBER	DESCRIPTION	QTY
1	55130000144	ENGINE CASE CPL. 250/300 08	1
18	59033018000	BUSHING PIN 2000	1
19	0912060083	AH SCREW DIN0912-M 6X 8	1
20	0912060404	AH SCREW DIN0912-M 6X40 A2	1
26	54830024000	CLUTCH COVER GASKET 2003	1
27	54630027000	DOWEL BUSHING 13,8X11X12	1
28	54830027000	DOWEL 21X12 03	1
39	54830039000	ENGINE CASE GASKET 2003	1
49	54634049000	RETAINING PLATE	1
60	0025060406	HH COLLAR SCREW M6X40 TX30	9
63	0025060556	HH COLLAR SCREW M6X55 TX30	2
64	0025060606	HH COLLAR SCREW M6X60 TX30	1
99	55130099000	GASKET SET 250/300 08	x

085483012 / C105513010

* NEW PART

X AS REQUIRED

CLUTCH COVER

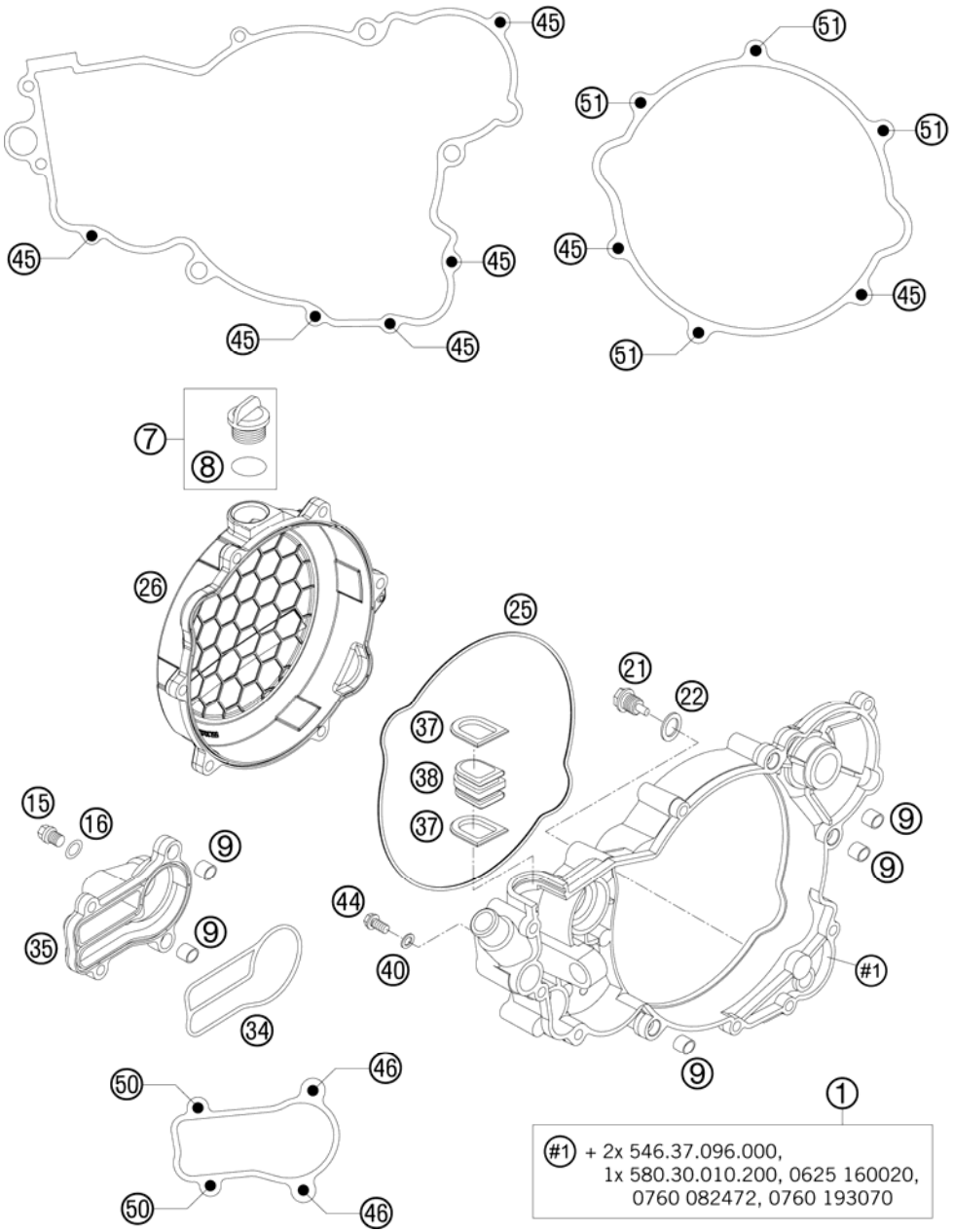

FIG	PART NUMBER	DESCRIPTION	QTY
1	54830001044	INTERM. CLUTCH COVER CPL. 03	1
7	58030120000	OIL FILLER CAP M24x3 WITH O-R	1
8	0770191015	O-RING 19,00X3,00 NBR	1
9	49030090000	DOWEL 9,8 X 7 X 10	5
15	0910100003	PLUG DIN0910-M 10X1	1
16	0603100141	COPPER GASKET DIN7603-10X14X1	1
21	58030021000	OILDRAIN PLUG W.MAG. M 12X1,5	1
22	58038022000	CU-SEAL RING DIN7603-12X18X1,5	1
25	54830025000	GASKET F. CLU.COVER 250/300 03	1
26	5483052600089	CLUTCH COVER OUTSIDE 11	1
34	54835003000	GASKET WAPU-COVER 250 2003	1
35	54835001000	WATERPUMP COVER 250/300 03	1
37	54637107000	SEALING ELEMENT BOTTOM	2
38	54837091100	SEALING CARRIER 07	1
40	0603061001	CU-SEAL RING DIN7603-6X10X1	1
44	0025060126	HH COLLAR SCREW M6X12 TX30	1
45	0025060206	HH COLLAR SCREW M6X20 TX30	7
46	0025060256	HH COLLAR SCREW M6X25 TX30	2
50	0025060556	HH COLLAR SCREW M6X55 TX30	2
51	0025060606	HH COLLAR SCREW M6X60 TX30	4

095483020 / C115483020

* NEW PART

X AS REQUIRED

REED VALVE CASE

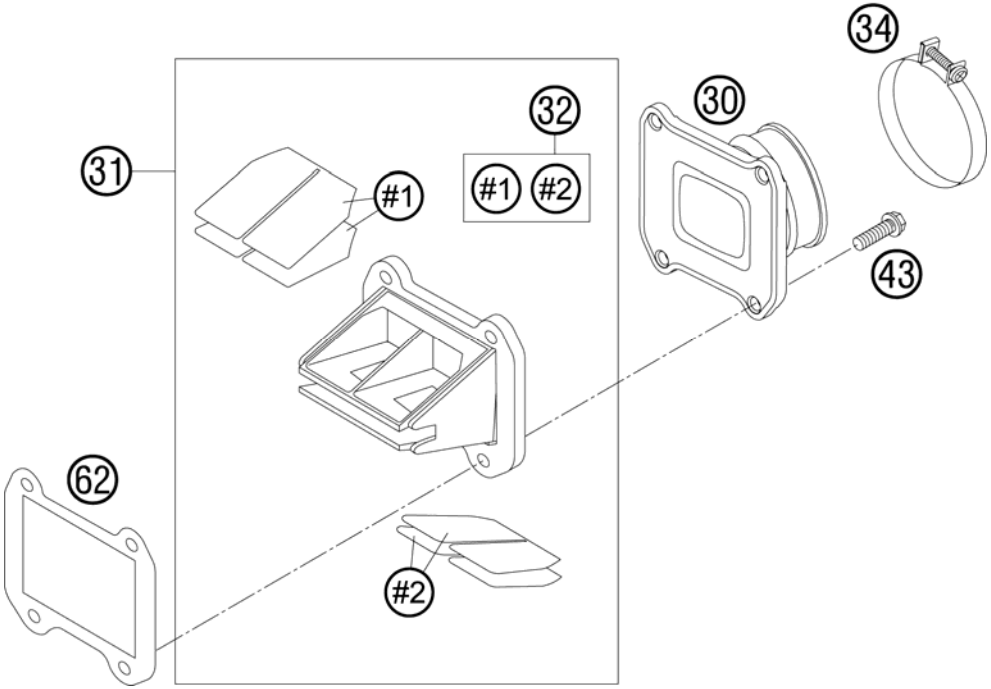

FIG	PART NUMBER	DESCRIPTION	QTY
30	54830050000	INTAKE FLANGE V-FORCE 04	1
31	54830051444	REED VALVE ASSY V-FORCE SX	1
32	54830052100	REED VALVE SET V-FORCE 07	1
34	54330061000	CLAMP 52/12 GEMI	1
43	0025060206	HH COLLAR SCREW M6X20 TX30	4
62	54830062200	GASKET REED VALVE CASE	1

085483070 / C115483071

* NEW PART

X AS REQUIRED

CYLINDER, CYLINDER HEAD

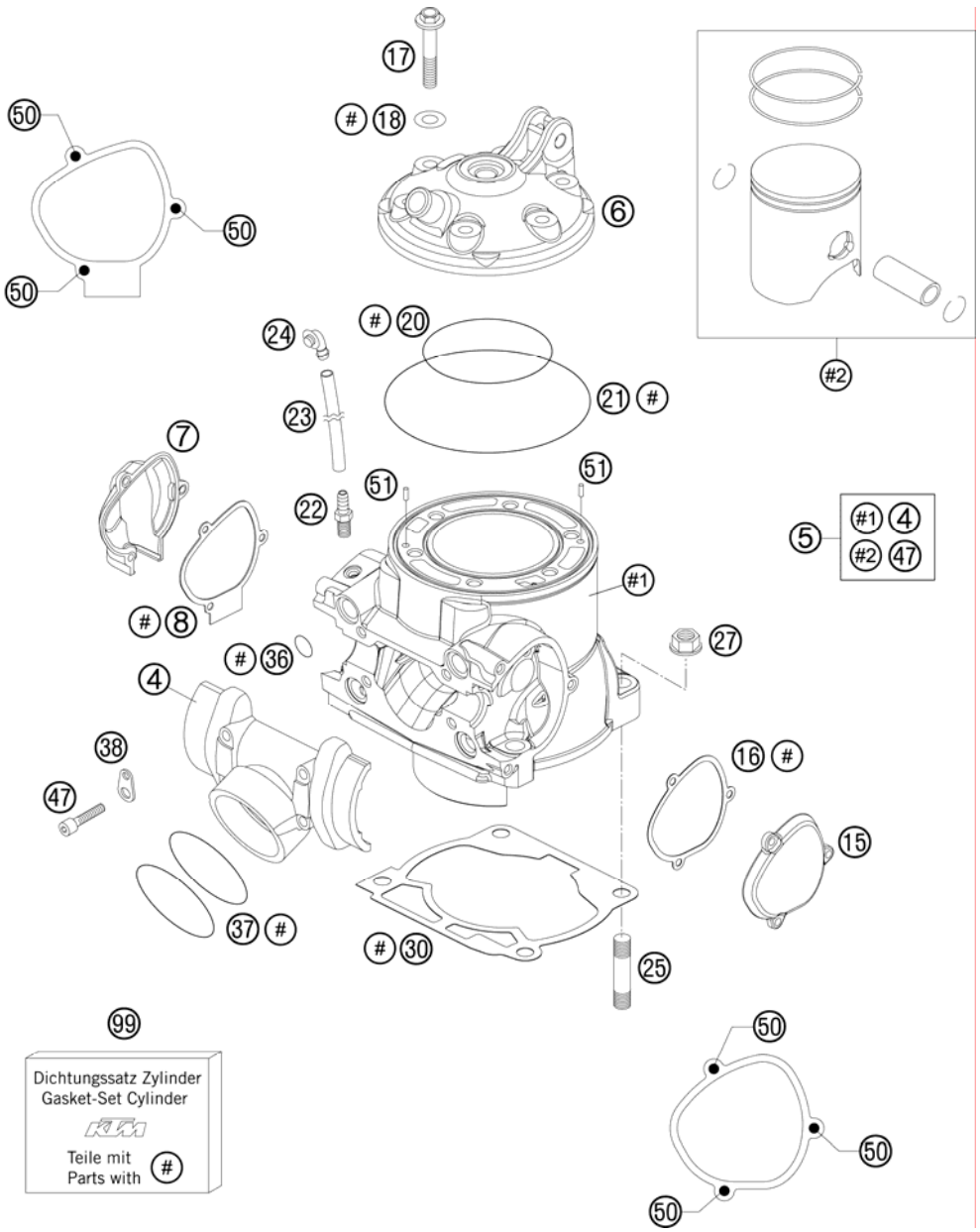

FIG	PART NUMBER	DESCRIPTION	QTY
4	54837001200	INTERMEDIATE FLANGE 250/300 07	1
5	54830338200	CYLINDER + PISTON CPL. 2011	1
6	54830306500	CYLINDERHEAD 300 XC/EXC	1
7	5483700700015	CONTROL COVER R/S 09	1
8	54837008000	GASKET FOR CONTROL COVER R/S	1
15	5483700500015	CONTROL COVER L/S 09	1
16	54837006000	GASKET FOR CONTROL COVER L/S	1
17	54830079000	COLLAR SCREW M 8X35 WS=13	6
18	56530080000	CU-SEAL RING 8 X 16 X 1	6
20	0770078020	O-RING 78,00X2,00 VIT. BLACK	1
21	0770105020	O-RING 105,00X2,00 07	1
22	58336020090	VACUUM CONNECTION M 6X1	1
23	31007107001	PVC-HOSE 6X9 MM PER METER	x
24	50303089000	ANGLE PIECE '97	1
25	0835100351	STUD DIN0835-M10X35	4
27	54630044000	COLLAR NUT M10 WS=13	4
30	54830030002	GASKET CYLINDER BASE 0,2MM 03	x
30	54830030004	GASKET CYLINDER BASE 0,4MM 03	x
30	54830030005	GASKET CYLINDER BASE 0,5MM 03	x
30	54830030075	GASKET CYLINDER BASE 0,75MM 03	x
36	0770116241	O-RING 11,3 X2,4 SILICON	4
37	0770440030	O-RING 44,00X3,00 VITON	2
38	51005074000	RETAINING PLATE	2
47	0912060303	AH SCREW DIN0912-M 6X30	4
50	58605083014	SCREW M5X14 TORX 25 07	6
51	0402040980	NEEDLE ROL.DIN5402 NRB 4X9,8	2
99	54830097300	GASKET SET CYL. 300 EXC-E 08	1

105483050 / C115513050

* NEW PART

X AS REQUIRED

CRANKSHAFT, PISTON

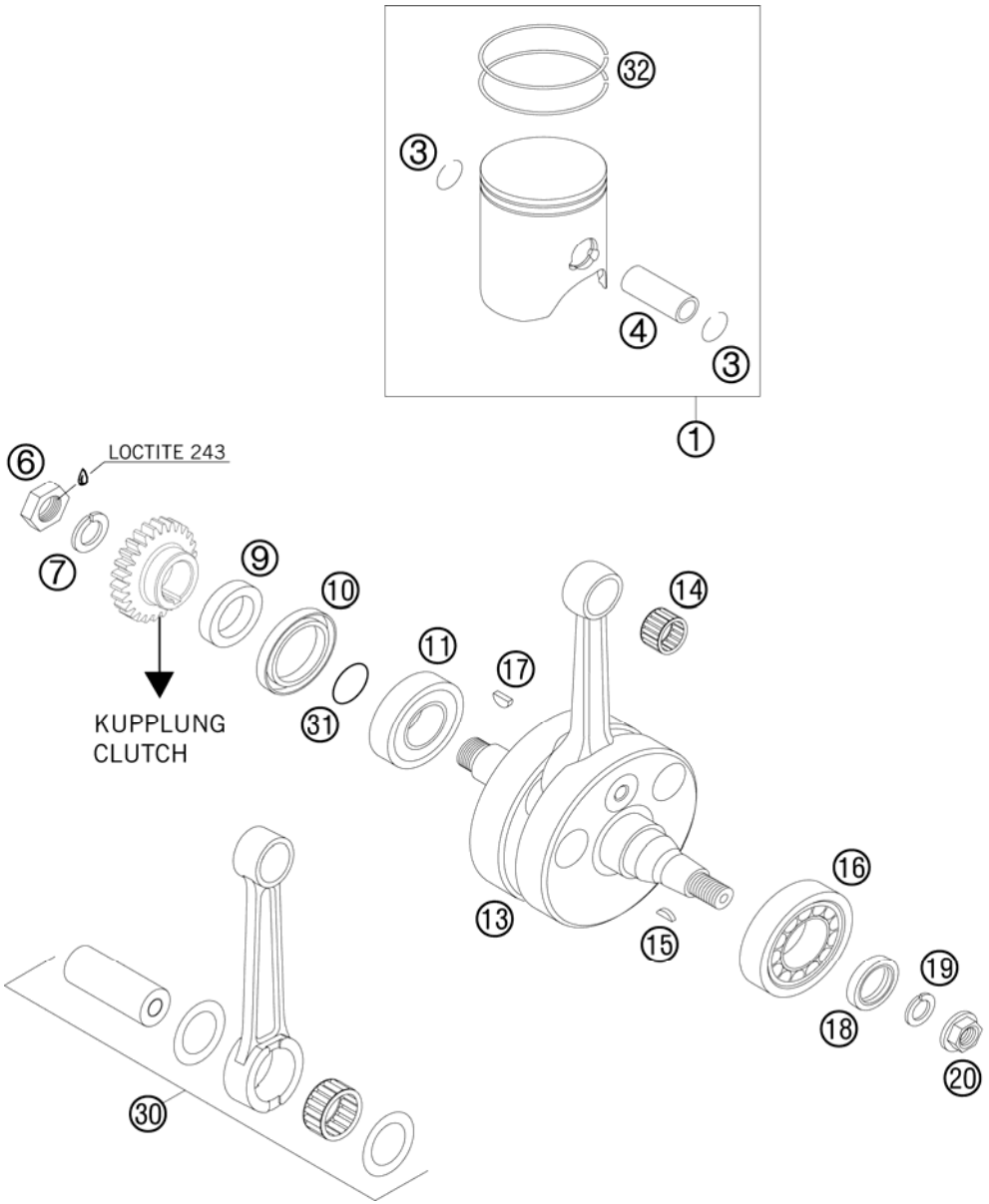

FIG	PART NUMBER	DESCRIPTION	QTY
1	54830107200 I	PISTON CPL. GR 1 D=71.925	1
1	54830107200 II	PISTON CPL. GR 2 D=71.935	1
3	54030074000	WIRE LOCK RING C18X1,5	2
4	54830233000	PISTON PIN	1
6	54630029000	HEX.NUT L/SH M18X1,5	1
7	58132072000	LOCK WASHER VSK 18	1
9	54830016000	SPACER SLEEVE 28X38X10 03	1
10	0760385273	SHAFT SEAL RING 38X52X7BTSL	1
11	0625623204	BALL BEARING 32X65X17 NTN	1
13	54830118200	CRANKSHAFT 250/300 EXC-MXC 08	1
14	54430034000	NEEDLE BEARING KBK 18X22X20	1
15	0888030050	WOODRUFF KEY DIN6888-3X5X13	1
16	56530123200	CYLIND.ROL.BEAR. NJ207ET2XCS42	1
17	6946005	WOODRUFF KEY 5X6,5 HARDED	1
18	0760253570	SHAFT SEAL RING 25X35X7 BTSL	1
19	50230029012	LOCKING RING VSK 12	1
20	49030021000	COLLAR NUT M12X1 R/S	1
30	54830015144	CONROD REP. KIT 250/300	1
31	0770250015	O-RING 25,00X1,50 NBR 70	1
32	54830132000	R-RING 72,0MM 300 2004	2

085483060 / C115513060

* NEW PART

X AS REQUIRED

CARBURETOR

ACHTUNG !!!
Vor dem Einbau des Vergasers, Bedüsung kontrollieren.

CAUTION !!!
Before mounting the carburetor, check the jetting.

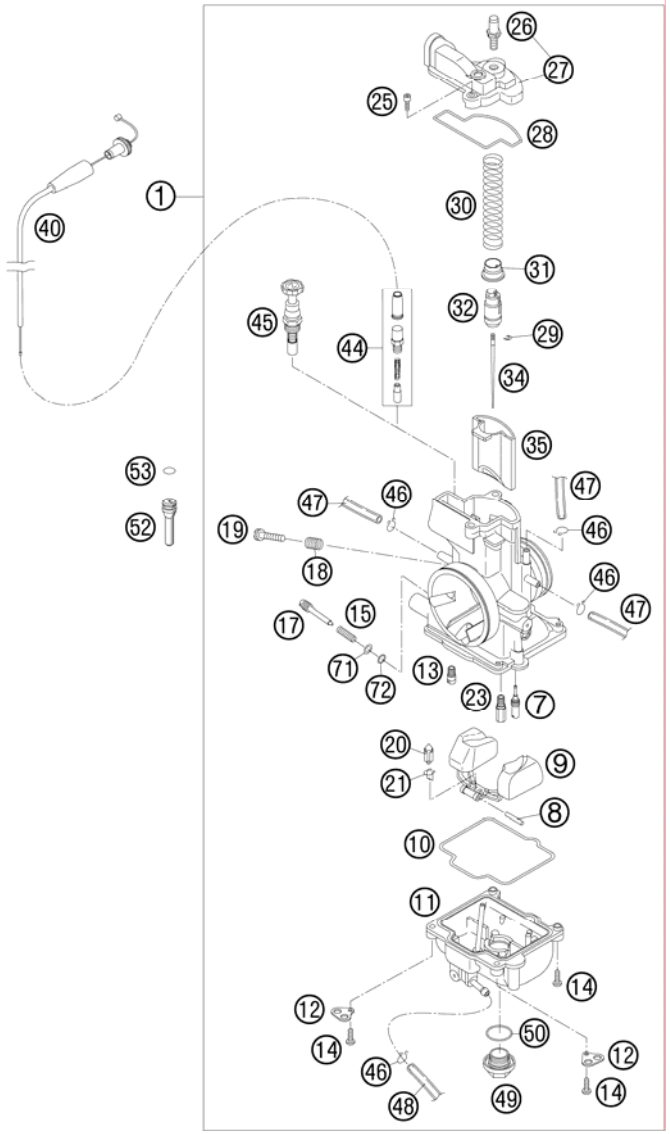

FIG	PART NUMBER	DESCRIPTION	QTY
1	54831201044	CARB. KEIH. PWK 36S AG FK26 08	1
7	54531607035	IDLE JET 35 KEIHIN	x
7	54531607038	IDLE JET 38 KEIHIN	x
7	54531607040	IDLE JET 40 KEIHIN	x
7	54531607042	IDLE JET 42 KEIHIN	x
7	54531607045	IDLE JET 45 KEIHIN	x
7	54531607048	IDLE JET 48 KEIHIN	x
7	54531607050	IDLE JET 50 KEIHIN	x
7	54831007138	IDLE JET SIZE 38X38 KEIHIN	x
8	57331008000	ARM PIN FLOAT	1
9	57331009000	FLOAT CPL.	1
10	54831010000	GASKET FLOAT CHAMBER	1
11	54831011000	FLOAT CHAMBER PWK38-S AG	1
12	54531612100	RETAINING PLATE FOR BLEEDER	2
13	54831051050	STARTER JET 50 KEIHIN	x
13	54831051085	STARTER JET 85 KEIHIN	x
14	0016040163	HH COLLAR SCREW M 4X16 WS=6	4
15	54531615000	SPRING FOR ADJUSTMENT SCREW	1
17	54831017000	STOP SCREW CPL.	1
18	54631118000	SPRING	1
19	54631219100	ADJUSTMENT SCREW M 5	1
20	54631220000	FLOAT NEEDLE	1
21	54531621000	CLAMP	1
23	54531623115	MAIN JET 115 KEIHIN	x
23	54531623150	MAIN JET 150 KEIHIN	x
23	54531623152	MAIN JET 152 KEIHIN	x
23	54531623155	MAIN JET 155 KEIHIN	x
23	54531623158	MAIN JET 158 KEIHIN	x
23	54531623160	MAIN JET 160 KEIHIN	x
23	54531623162	MAIN JET 162 KEIHIN	x
23	54531623165	MAIN JET 165 KEIHIN	x
23	54531623168	MAIN JET 168 KEIHIN	x
23	54531623170	MAIN JET 170 KEIHIN	x
23	54531623172	MAIN JET 172 KEIHIN	x
23	54531623175	MAIN JET 175 KEIHIN	x

085033111 / C115513111

* NEW PART

X AS REQUIRED

ACHTUNG !!!
Vor dem Einbau des Vergasers, Bedüsung kontrollieren.

CAUTION !!!
Before mounting the carburetor, check the jetting.

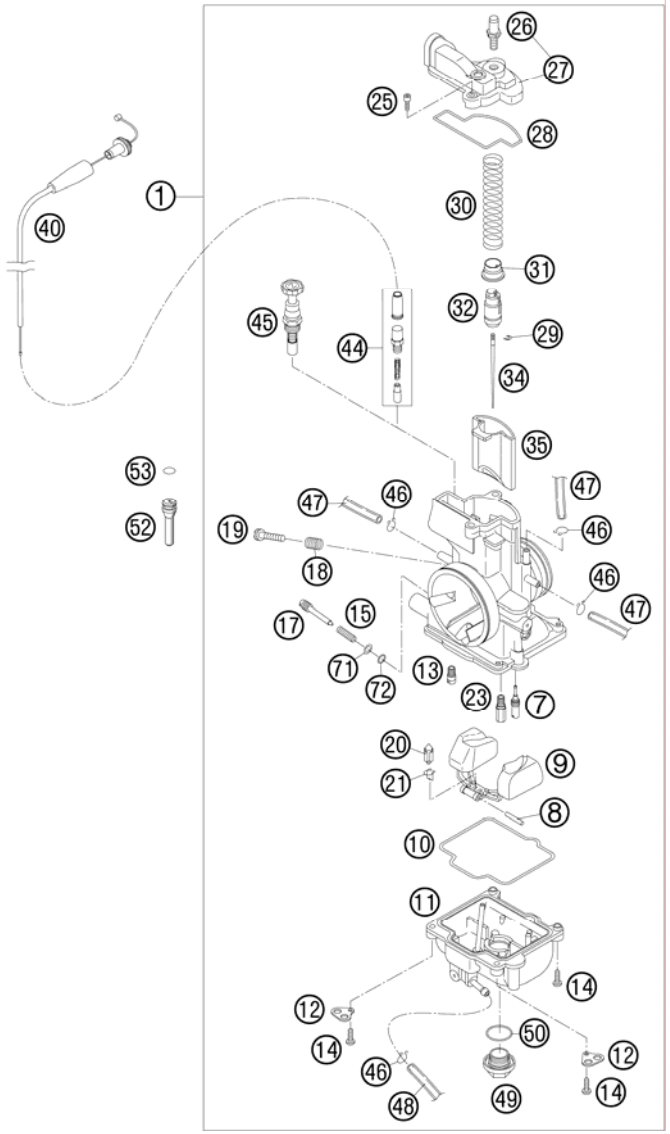

FIG	PART NUMBER	DESCRIPTION	QTY
25	54831025000	SPECIAL-AH-SCREW M 4X12	2
26	54831029000	THROTTLE CALBE HOLDER M6X0,75	1
27	54831127000	CARBURETOR COVER PWK36-S AG	1
28	54831028000	GASKET FOR CARBURETOR COVER	1
29	54531629000	CLIP FOR JET NEEDLE	1
30	54831030000	SLIDING SPRING	1
31	54631231000	SPRING CAP	1
32	54631232000	NIPPLE	1
34	54731134100	JET NEEDLE KEIHIN N2ZW 08	x
34	54731134200	JET NEEDLE KEIHIN N2ZJ 08	x
34	54731134600	JET NEEDLE KEIHIN N2ZG 08	x
34	54731134700	JET NEEDLE KEIHIN N2ZH 08	x
34	54731134800	JET NEEDLE KEIHIN N2ZK 08	x
34	54731134900	JET NEEDLE KEIHIN N2ZL 11	x
34	54831034100	JET NEEDLE KEIHIN N84K	x
35	54631035000	THROTTLE VALVE 7 FOR 38 PJ '00	1
40	54831078000	CABLE F. COLD START ACT. 08	1
44	58502096044	CONNECT. COLD START CABLE CPL.	1
45	54631245000	STARTER PISTON CPL.	1
46	54531696000	CLAMP 6 MM	5
47	31007007101	PVC-HOSE 4X6MM	2
48	52031137001	PVC-HOSE 3X5MM	x
49	54531699000	PLUG M 18X1	1
50	0770180230	O-RING 18,00X2,30 NBR 70	1
52	50331029038	SLIDE STOP L=38MM	x
52	52331029000	SLIDE STOP L=36 08	x
53	0770060018	O-RING 6,00X1,78	x
71	54831071000	WASHER ADJUSTING SCREW	1
72	54831072000	O-RING ADJUSTING SCREW	1

085033111 / C115513111

* NEW PART

X AS REQUIRED

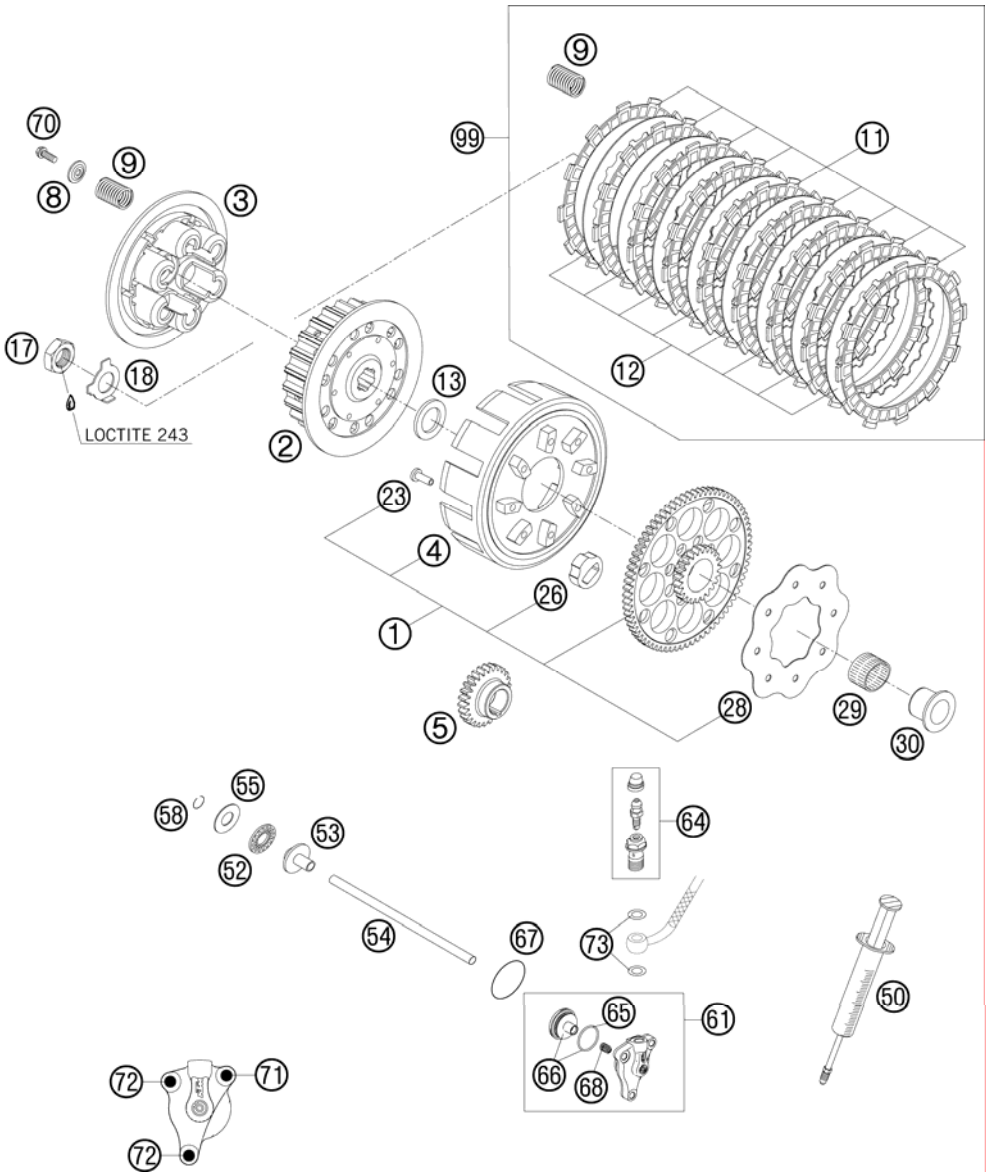

FIG	PART NUMBER	DESCRIPTION	QTY
1	54832001072	OUTER CLUTCH HUB 72-T CPL. 03	1
2	54832002000	INNER CLUTCH HUB 546/548 2003	1
3	54632003100	PRESSURE CAP	1
4	54832001000	OUTER CLUTCH HUB LOOSE 2003	1
5	54832000026	PRIMARY GEAR 26T 2003	1
8	58132081000	SPRING RETAINER 6,2 X 20 X 3,2	6
9	54832080000	CLUTCH SPRING 2,5X43 8,75T	6
11	54832011000	LINING DISC FCC 04	9
12	54832012100	STEEL DISC	8
13	57532013000	SUPPORTWASHER 22,2X35X3 HARDE.	1
17	0936181505	HEXAGON NUT DIN0936-M18X1,5 R.	1
18	56532018000	LOCK WASHER	1
23	0733060150	CLUTCH RIVET DIN7338- 6X15	8
26	58132026000	DAMPING ELEMENT	8
28	58132028000	RETAINING PLATE	1
29	56532095000	NEEDLE BEARING K26X30X22ZW.KSE	1
30	50332070000	INNER RING WITH COLLAR	1
50	50329050000	VENT INJEKTION HYDR. CLUTCH	1
52	54637097200	AXIAL NEEDLE BEARING AXK 1226	1
53	50332054051	PRESSURE PIECE 125-380 '98	1
54	54832054000	PUSH ROD 250 2003	1
55	54637098200	AXIAL WASHER AS1226 12X26X1	1
58	0993012000	CIRCLIP DIN7993-RW12	1
61	54832061044	OUTPUT CYLINDER CPL. 06	1
64	62513020000	BLEEDER SCREW CPL. 05	1
65	54832067000	O-RING	1
66	54832066000	PISTON CPL.	1
67	0770300015	O-RING 30,00X1,50 NBR 70	1
68	54832069000	PRESSURE SPRING	1
70	0025060166	HH COLLAR SCREW M6X16 TX30	6
71	0025060356	HH COLLAR SCREW M6X35 TX30	1
72	0025060206	HH COLLAR SCREW M6X20 TX30	2
73	0603100141	COPPER GASKET DIN7603-10X14X1	2
99	54832011010	CLUTCH KIT 250/300 '04-'10	x

095483210 / C095483210

* NEW PART

X AS REQUIRED

TRANSMISSION I - MAIN SHAFT

ACHTUNG !!!
Bei Bestellung von Getrieberädern, Markierung beachten.
CAUTION !!!
When ordering transmission gears, check marking.

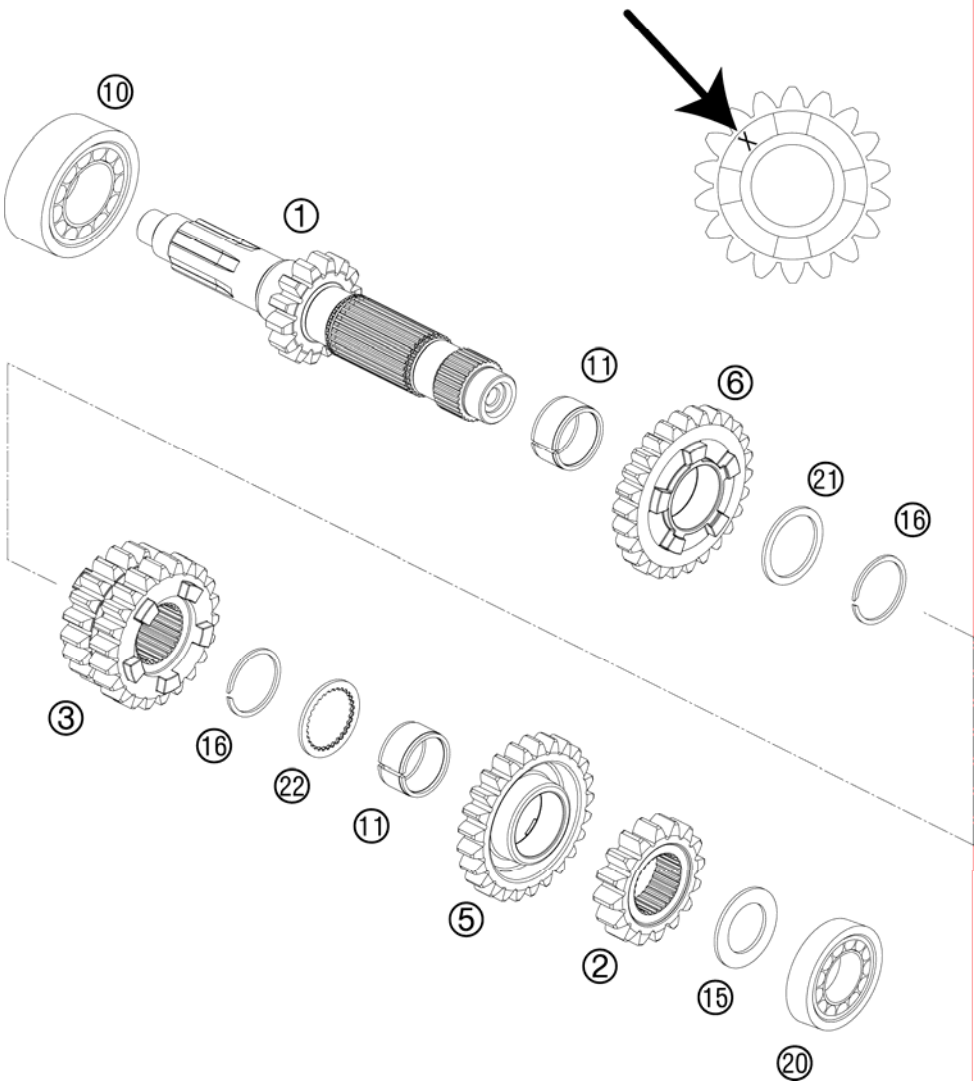

FIG	PART NUMBER	DESCRIPTION	QTY
1	54833201000	MAIN SHAFT CPL.	1
2	54833202000	SOLID GEAR	1
3	54833203000	SLIDING GEAR 3./4.GANG,Z=20/22	1
5	54833205000	IDLER GEAR 5.G, Z =25	1
6	54833206000	IDLER GEAR 6. G, Z=26	1
10	0625062054	BALL BEARING 6205 C3 NTN	1
11	0405222613	NEEDLE BEAR. K 22X26X13 TN	2
15	54633015000	STOP DISK 20,2X33X1,5	1
16	0417025000	CIRCLIP SW25	2
20	0625160040	GROOVED BALL BEAR. TM 16004 C3	1
21	54833044000	STOP DISC 25X31X1,5	1
22	54833043000	STOP DISC 25X0,8X30X30X7H	1

115483330 / C115483332

* NEW PART

X AS REQUIRED

TRANSMISSION II - COUNTERSHAFT

ACHTUNG !!!
Bei Bestellung von Getrieberädern, Markierung beachten.
CAUTION !!!
When ordering transmission gears, check marking.

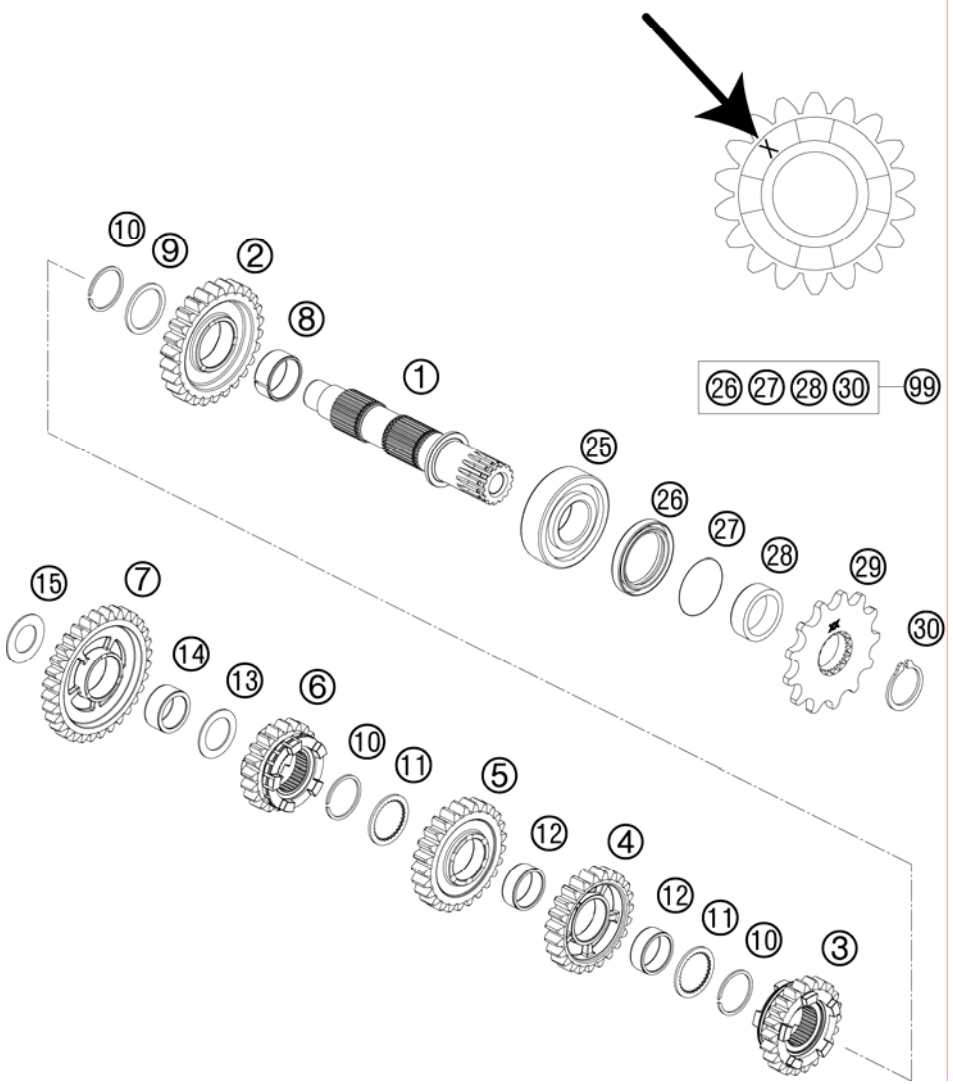

FIG	PART NUMBER	DESCRIPTION	QTY
1	54833210000	COUNTER SHAFT CPL.	1
2	54833212000	IDLER GEAR 2. G., Z=26	1
3	54833215000	SLIDING GEAR 5.G., Z=22	1
4	54833214000	IDLER GEAR 4.G., Z=23	1
5	54833213000	IDLER GEAR 3.G., Z= 25	1
6	54833216000	SLIDING GEAR 6.G., Z=20	1
7	54833211000	IDLER GEAR 1. G, Z=32	1
8	0405242812	NEDDLE BEAR. K24X28X11,9 DIV.	1
9	54833044000	STOP DISC 25X31X1,5	1
10	0417025000	CIRCLIP SW25	3
11	54833043000	STOP DISC 25X0,8X30X30X7H	2
12	0405222611	NEEDLE BEAR.K 22X26X10 DIVIDED	2
13	54833080000	STOP DISC 20,2X30X1	1
14	0405202612	NEEDLE BEARING K 20X26X12	1
15	56033030000	STOP DISC 17,2X30X1	1
25	54833025000	BALL BEARING TM-SC05C20C4 NTN	1
26	0760324565	SHAFT SEAL RING 32X45X6,5 BTSL	1
27	0770250020	O-RING 25,00X2,00 NBR 70	1
28	54833032011	SPACER SLEEVE DRIVE END 2003	1
29	50033029013	FRONT SPROCKET 13-T	x
29	50033029014	FRONT SPROCKET 14-T	x
30	52033096000	LOCK RING DIN0471-25X1,64SD	1

115483360 / C115483362

* NEW PART

X AS REQUIRED

KICK STARTER

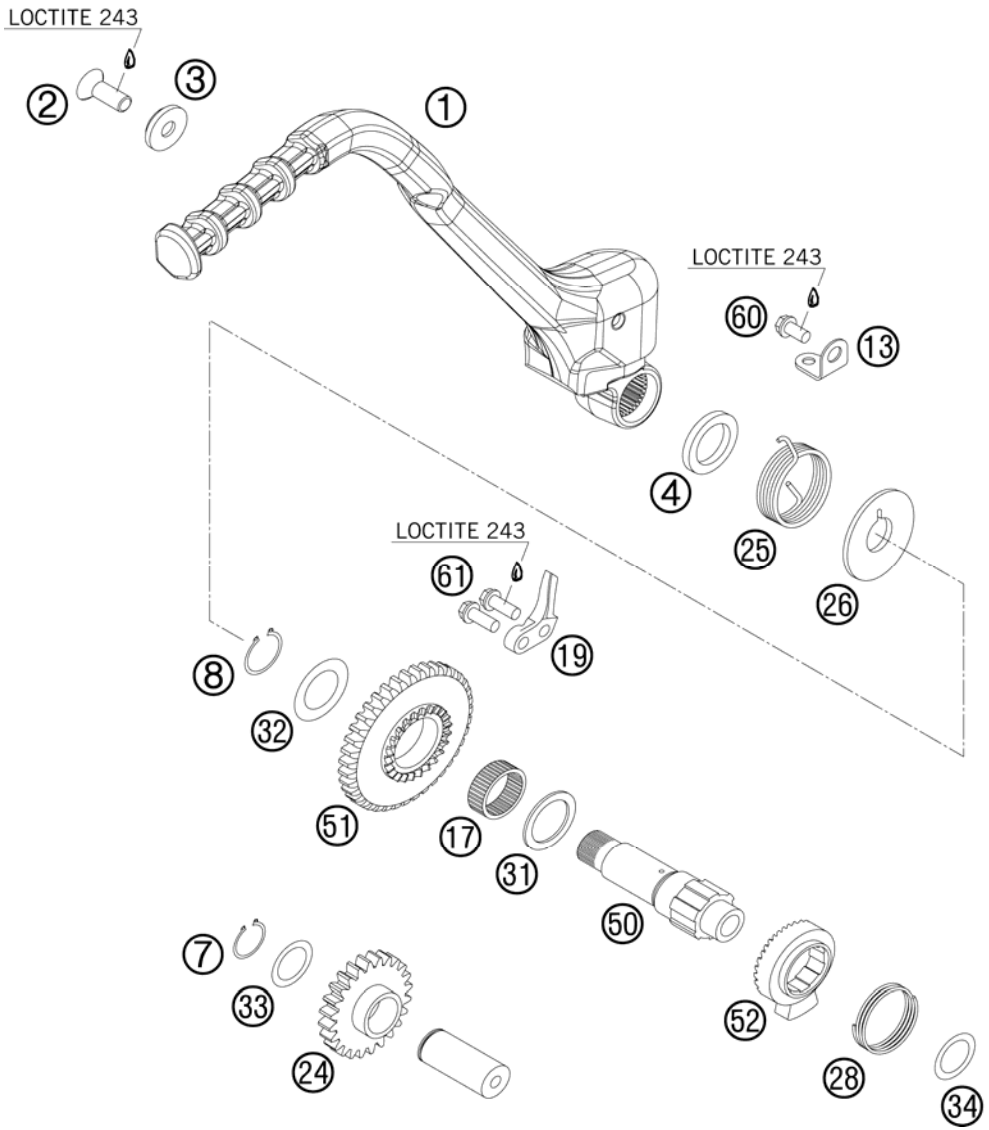

FIG	PART NUMBER	DESCRIPTION	QTY
1	77133070144	KICKSTARTER CPL.	1
2	0019080206S	FLAT HEAD SCREW M. ISA45 M8X20	1
3	54633037000	WASHER 8MM GALVANIZED	1
4	0760193070	SHAFT SEAL RING 19X30X7 B	1
7	0471170010	CIRCLIP DIN0471-17X1	1
8	0471190120	CIRCLIP DIN0471-19X1,2	1
13	54633074000	SPRING HANGER	1
17	0405222610	% NEEDLE BEARING K 22X26X10 A	1
19	59033069000	BUMP PART	1
24	54833024000	INTERMEDIATE GEAR 2003	1
25	54633025000	KICKSTARTER SPRING	1
26	54633026000	DRIVING HUB	1
28	58033028000	RATCHET GEAR SPRING 1,2 MM	1
31	58033031000	STOP DISK 22,2 X 30 X 1,5	1
32	59033080000	SHIM 20X32X1	1
33	54633090000	STOP DISK 17,2X25X1	1
34	0988172405	SHIM WASHER DIN0988-17X24X0,5	1
50	59033050100	KICKSTARTER SHAFT	1
51	54833051034	KICKSTARTER GEAR 34-T 03	1
52	59033052000	RATCHET GEAR KICKSTARTER	1
60	0025060106	HH COLLAR SCREW M6X10 TX30	1
61	0025060206	HH COLLAR SCREW M6X20 TX30	2

115483390 / C115483391

* NEW PART

X AS REQUIRED

SHIFTING MECHANISM

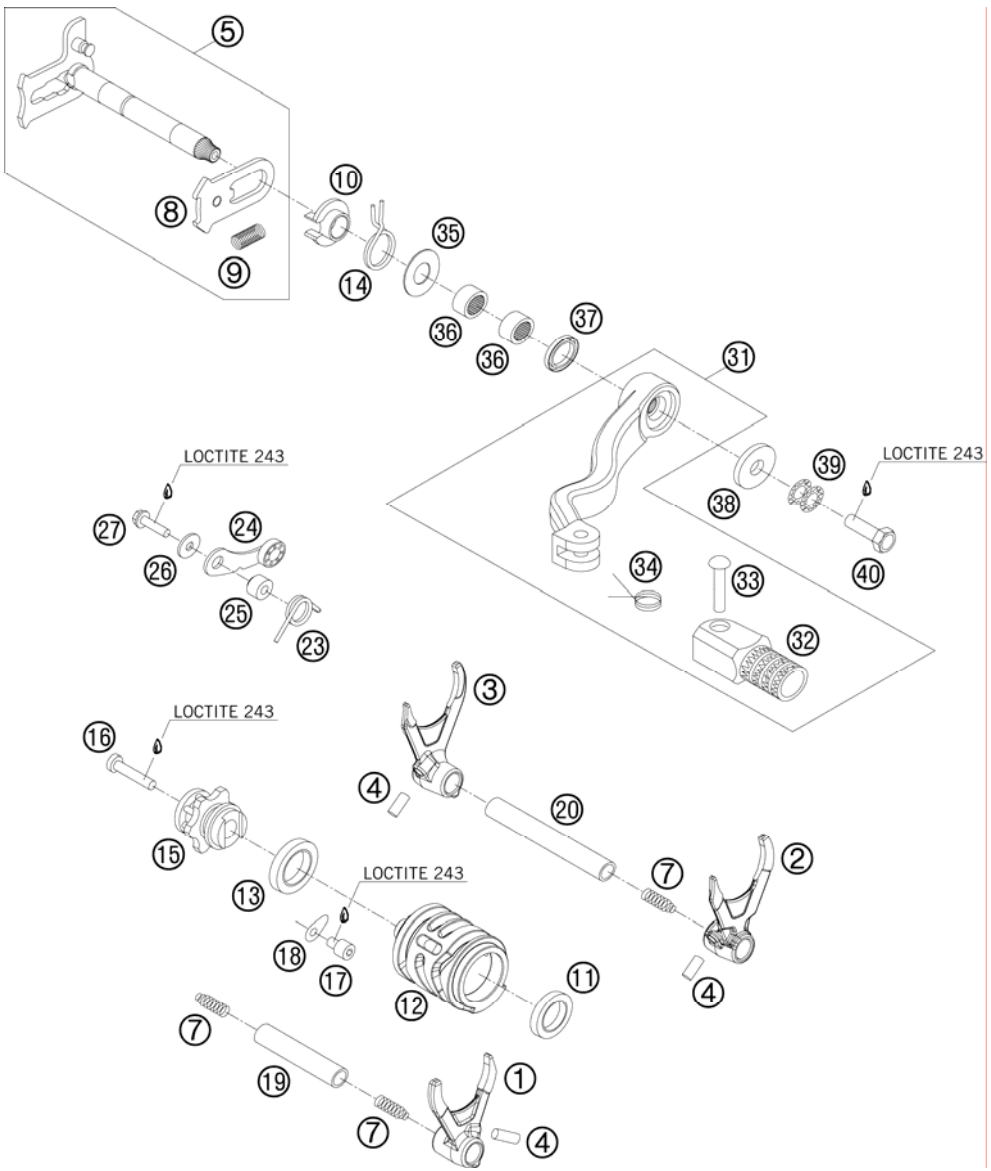

FIG	PART NUMBER	DESCRIPTION	QTY
1	54834201000	SHIFT FORK 5./6.G.	1
2	54834202000	SHIFT FORK 2./4.G.	1
3	54834203000	SHIFT FORK 1./3. G.	1
4	0402061480	NEEDLE ROLLER DIN5402 6X14,8	3
5	54834005044	SHIFTING SHAFT CPL. 03	1
7	58038023200	PRESSURE SPRING 0,9MM	3
8	54634008044	SLIDING PLATE CPL.	1
9	56534013100	TENSIONING SPRING 0,8MM	1
10	54634020000	SPRING GUIDE	1
11	0625069034	BALL BEARING 6903 C4	1
12	54834212000	SHIFTING DRUM	1
13	0625618052	BALL BEARING 6805 C3 JR	1
14	54834014000	RETURN SPRING 03	1
15	54834015000	SHIFT LOCATING DRUM 2003	1
16	0012060303	AH SCREW DIN6912 M6X30 8.8	1
17	0912060083	AH SCREW DIN0912-M 6X 8	1
18	54634049000	RETAINING PLATE	1
19	54834019000	SHIFT. RAIL MAIN SHAFT 250/300	1
20	54834020000	SHIFT. RAIL C. SHAFT 250/300	1
23	54834023000	LOCKING LEVER SPRING 03	1
24	50334024144	LOCATING LEVER CPL. 08	1
25	54634052300	SLEEVE FOR LOCKING LEVER	1
26	0349000050	WASHER DIN7349-5X15X2	1
27	0025050206	HH COLLAR SCREW M5X20 TX30	1
31	54834031000	SHIFT LEVER CPL. 250/300 05	1
32	54634131000	STEP PLATE FOR SHIFT LEVER 250	1
33	54634031050	BOLT 6X25 FOR SHIFT LEVER	1
34	54634032100	SHIFTING LEVER SPRING 250	1
35	54634050000	STOP DISK 14X30X1	1
36	54632095000	NEEDLE BEAR.HK 1412 14X20X12	2
37	0760142460	SHAFT SEAL RING 14X24X6 B	1
38	50232050001	STEEL WASHER 6,4X17X3	1
39	50233041000	PAIR OF WASHERS M 6 NORDLOCK	1
40	59009062016	SPECIAL SCREW M6X16 WS=8 10.9	1

115483410 / C115483411

* NEW PART

X AS REQUIRED

COOLING SYSTEM

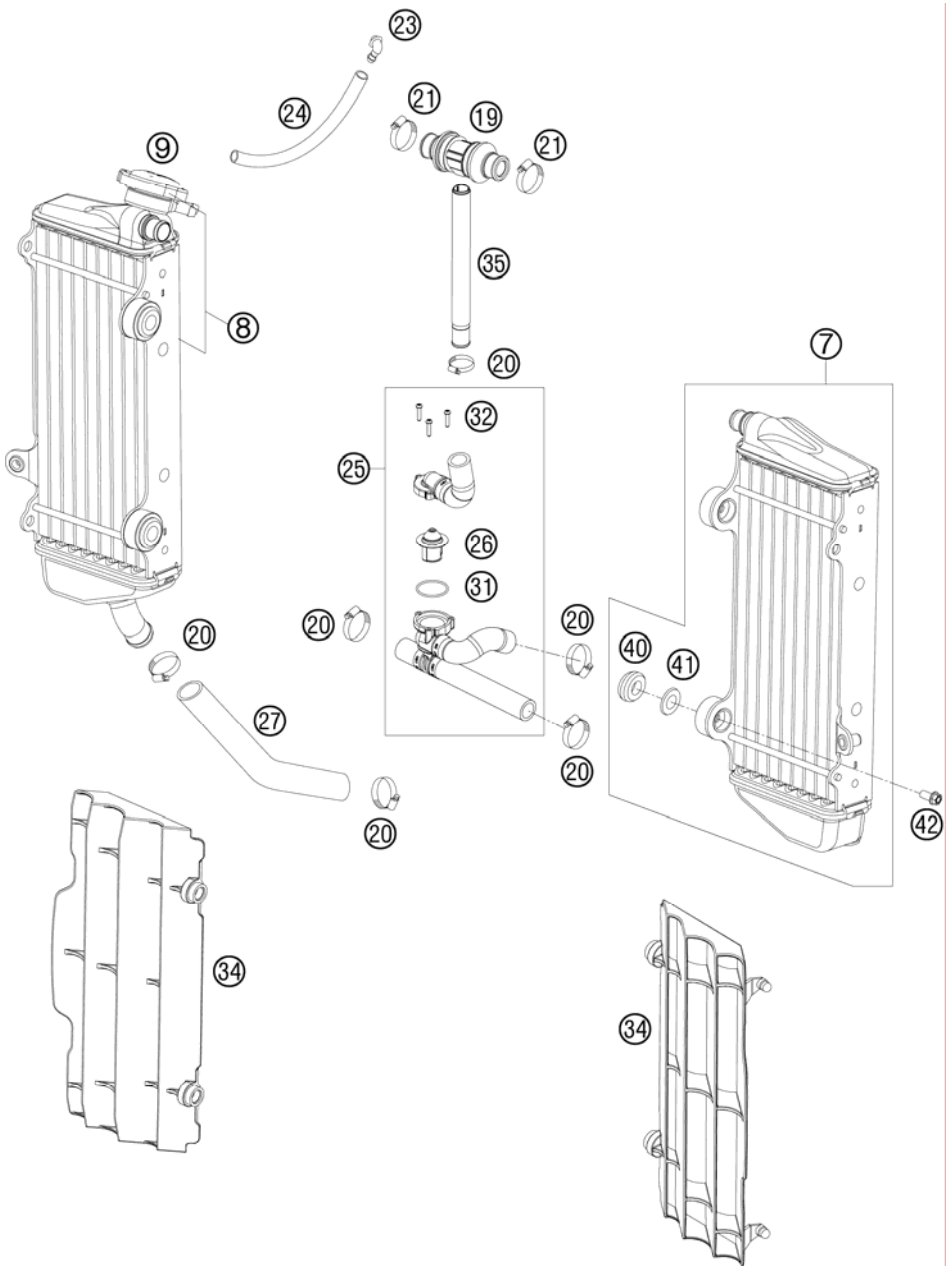

FIG	PART NUMBER	DESCRIPTION	QTY
7	54835007300	RADIATOR L/S "55562" 11	1
8	54835008400	RADIATOR R/S "55620" 11	1
9	77335016000	RADIATOR CAP SMALL 1,8 BAR	1
19	77335026000	T-CONNECTOR CPL. ´07	1
20	10001020000	HOSE CLAMP GEMI 16-27	6
21	42013037400	HOSE CLAMP NORMA 12/24	2
23	50303089000	ANGLE PIECE '97	1
24	31007107001	PVC-HOSE 6X9 MM PER METER	x
25	54835426033	RADIATOR H. 250 W. THERM.55 08	1
26	54835017000	THERMOSTAT 55°C 2004	1
27	54835027000	RADIATOR HOSE 18X25X130 MM 03	1
31	0770320020	O-RING 32,00X2,00	1
32	0016040183	SCREW FOR PLASTIC D=4X18	3
34	7733503400030	RADIATOR PROTECTION BLACK 07	2
35	54835072000	HOSE CONNECTOR 2 STROKE 07	1
40	41001052000	RUBBER SLEEVE D=12MM	4
41	77335001000	WASHER FOR RADIATOR 08	4
42	0023060123	COLLAR SCREW M6X12 TX	4

085483530 / C115483532

* NEW PART

X AS REQUIRED

EXHAUST CONTROL

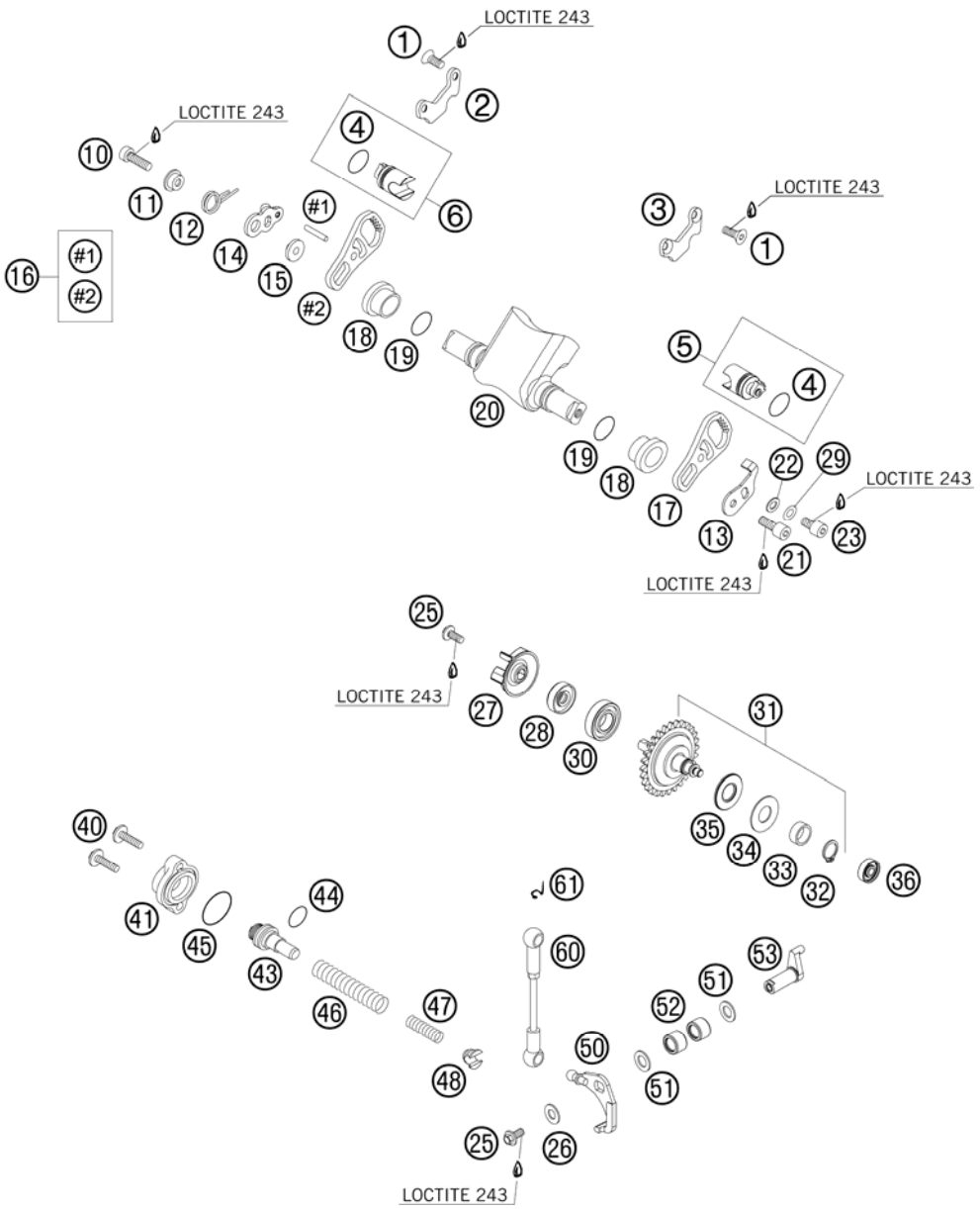

FIG	PART NUMBER	DESCRIPTION	QTY
1	0019050103	INT. TORX FLAT HEAD M 5X10 8.8	4
2	54837362000	RETAINING PLATE 300 R/S 08	1
3	54837363000	RETAINING PLATE 300 L/S 08	1
4	0770160021	O-RING 16,00X2,00 VITON	2
5	54837361044	CONTROL VALVE 300 L/S CPL. 08	1
6	54837361144	CONTROL VALVE 300 R/S CPL. 08	1
10	0912060203	AH SCREW DIN0912-M 6X20	1
11	54637067000	SPRING SLEEVE	1
12	54637066000	OVERLOAD SPRING	1
13	54637085300	RETAIN.PLATE CONTROL FLAP '92	1
14	54637065000	CONTROL LEVER WITH BALL TYPE	1
15	54637068100	BUSHING SLEEVE	1
16	54837364044	GEAR SEGMENT RIGHT CPL. 08	1
17	54837364050	GEAR SEGMENT 300 L/S 08	1
18	54737019000	BEAR. SLEEVE F.CONTROL FLAP'97	2
19	0770150151	O-RING 15,00X1,50 VITON	2
20	54837320100	CONTROL FLAP 300 08	1
21	0912060163	AH SCREW DIN0912-M 6X16	1
22	54637056100	WASHER 6,5X11X2	1
23	0912060083	AH SCREW DIN0912-M 6X 8	1
25	0014050123	HH COLLAR SCREW M 5X12 WS=6	2
26	0349000050	WASHER DIN7349-5X15X2	1
27	54835005000	WATER PUMP WHEEL 07	1
28	0760082472	SHAFT SEAL RING 8X24X7 A DUO	1
29	0137060003	SPRING WASHER DIN0137-B 6	x
30	0625160020	BALL BEARING 16002 C3	1
31	54837050044	CENTRIFUGAL TIMER CPL. 250/300	1
32	0471120010	CIRCLIP DIN0471-12X1	1
33	54837054000	DISTANCE BUSH. CENTRIFUG.TIMER	1
34	54637071010	AXIAL WASHER AS1226	1
35	54637097200	AXIAL NEEDLE BEARING AXK 1226	1
36	54637098100	BALL BEARING 626LLBC3/5K	1
40	0014050203	HH COLLAR SCREW M 5X20 WS=6	2
41	54637070100	COVER LID 250-380'98	1
43	54837075000	SPRING GUIDE 250/300	1

115513710 / C115513711

* NEW PART

X AS REQUIRED

EXHAUST CONTROL

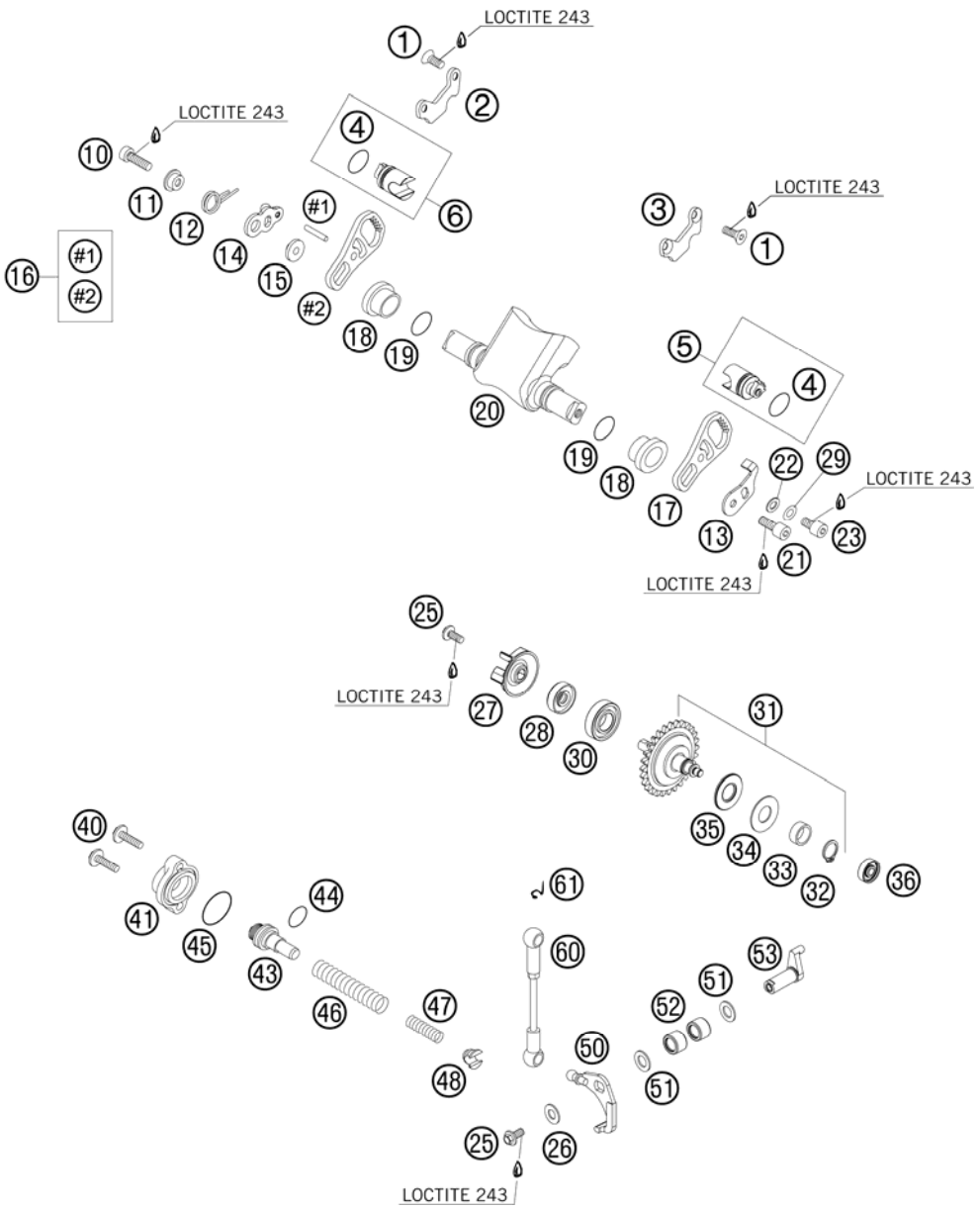

FIG	PART NUMBER	DESCRIPTION	QTY
44	0770021120	O-RING 12,37X2,62 NBR70	1
45	0770240020	O-RING 24,00X2,00 NBR70	1
46	54837069000	ADJUST. SPRING 2003	1
47	54637072300	AUXILIARY SPRING MID., YELLOW	1
47	54837072000	AUXILIARY SPRING SOFT, RED	x
47	54837072100	AUXILIARY SPRING HARD, GREEN	x
48	54637071200	SPRING INSERT	1
50	54637055244	ANGLE LEVER CPL. '91	1
51	0988101610	SHIM WASHER DIN988 10X16X1	2
52	54637096000	NEEDLE SLEEVE HK 1010	2
53	54837057000	CONTROL LEVER 03	1
60	54637095344	CONNECT.ROD CPL. L=109,5MM '91	1
61	50237195055	SECURING DIN-71805-S-8	2

115513710 / C115513711

* NEW PART

X AS REQUIRED

IGNITION SYSTEM

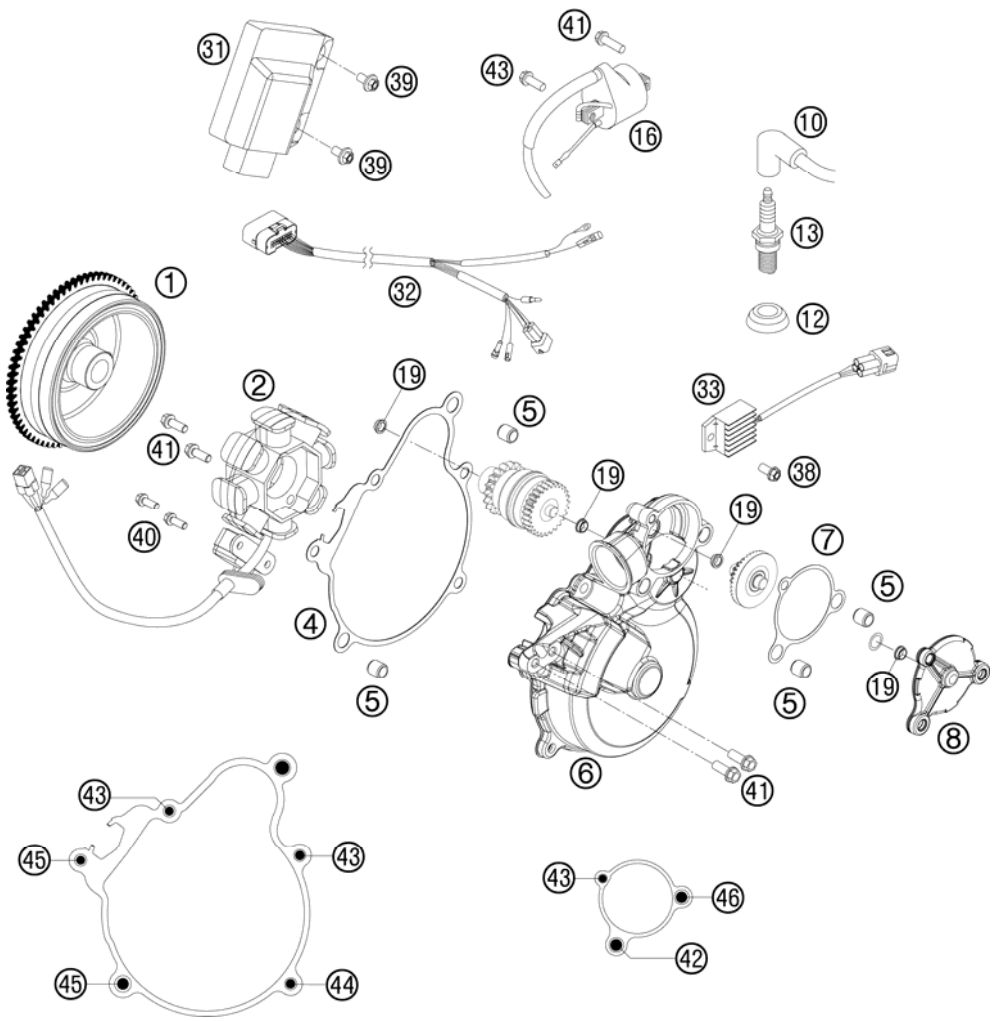

FIG	PART NUMBER	DESCRIPTION	QTY
1	55139005000	FLYWHEEL KOKUSAN	1
2	55139004000	STATOR KOKUSAN	1
4	55130040000	IGNITI.COVER GASKET 07	1
5	49030090000	DOWEL 9,8 X 7 X 10	4
6	5513050220033	IGNITION COVER	1
7	55130041100	IGN. OUT SIDE COV. GASKET 07	1
8	5513004524433	OUTER IGNITION COVER CPL.	1
10	47039090000	SPARK PLUG CAP NGK REINFORC.04	1
12	50231012000	SEALING CUP FOR SPARK PLUG	1
13	54739093000	SPARK PLUG NGK BR7ES	1
16	59039006000	IGNITIONCOIL "IG5128"	1
19	55140030100	COLLAR BUSHING	4
31	54839331200	CDI UNIT 300 EXC/XC 07	1
32	54839032300	WIRING HARNESS F.CDI 2-ST.SX07	1
33	80011034000	VOLTAGE REGULATOR 04	1
38	0025060126	HH COLLAR SCREW M6X12 TX30	3
39	0023060123	COLLAR SCREW M6X12 TX	2
40	0014050123	HH COLLAR SCREW M 5X12 WS=6	2
41	0025060206	HH COLLAR SCREW M6X20 TX30	5
42	0025060256	HH COLLAR SCREW M6X25 TX30	1
43	0025060166	HH COLLAR SCREW M6X16 TX30	4
44	0025060306	HH COLLAR SCREW M6X30 TX30	1
45	0025060356	HH COLLAR SCREW M6X35 TX30	2
46	0025060706	HH COLLAR SCREW M6X70 TX30	1

115483910 / C115513911

* NEW PART

X AS REQUIRED

ELECTRIC STARTER

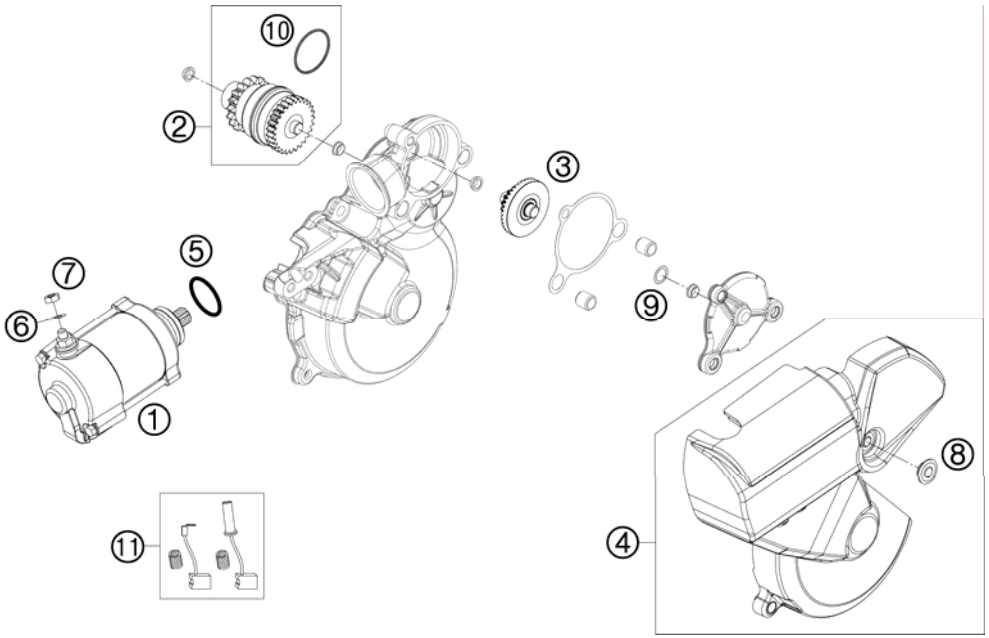

FIG	PART NUMBER	DESCRIPTION	QTY
1	55140001000	E-STARTER ENGINE KPL. 07	1
2	55140026000	BENDIX 2007	1
3	55140022100	CROWN WHEEL E-STARTER	1
4	55140540044	STARTER DRIVE COVER CPL.	1
5	0770250030	O-RING 25,00X3,00 NBR 70	1
6	0125060003	WASHER DIN0125-A 6,4	1
7	0985060003	SELF LOCK. NUT DIN0985-M 6	1
8	50308052000	BUSH FOR SPOILER 6X11X16X5 MM	1
9	0988081401	THRUST WASHER 8X14X0,1	x
9	0988081402	THRUST WASHER 8X14X0,2	x
9	0988081403	THRUST WASHER 8X14X0,3	x
9	0988081405	THRUST WASHER 8X14X0,5	x
10	55140027000	BENDIXSPRING	1
11	55140002044	BRUSH SET FOR STARTER	1

115484010 / C115484011

* NEW PART

X AS REQUIRED

KTM Group Partner

3CM084690KEN

Art.Nr.: 3CM084690KEN 7/2010

HUSABERG – a company of the KTM Group
A-5230 Mattighofen
www.husaberg.cc