FE 570 EU/UK 2010

SPARE PARTS MANUAL: CHASSIS

ART.NO.: 3CF2403J3EN

ENGLISH

HUSABERG

INDEX

FRONT FORK DISASSEMBLED

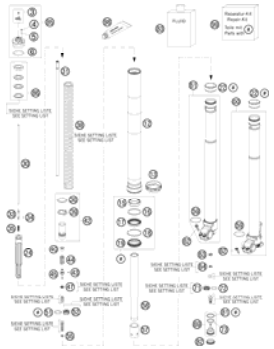

4

FRONT FORK, TRIPLE CLAMP

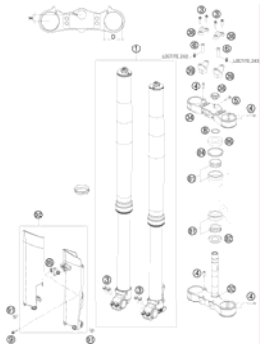

6

HANDLEBAR, CONTROLS

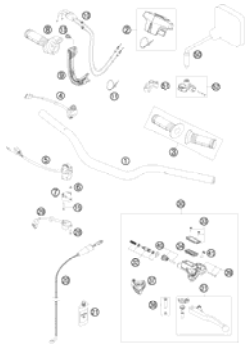

7

ENGINE GUARD

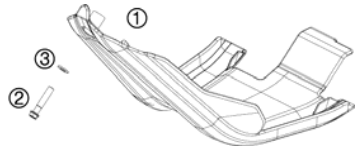

8

SIDE / CENTER STAND

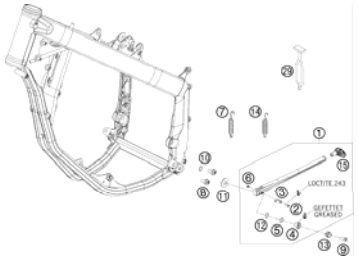

9

FRAME

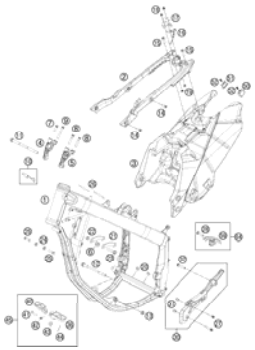

10

SWING ARM

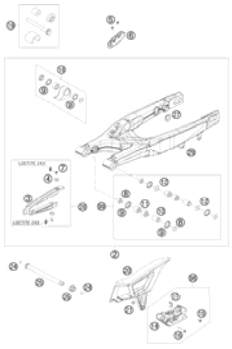

12

SHOCK ABSORBER DISASSEMBLED

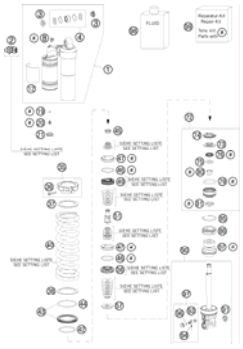

13

SHOCK ABSORBER

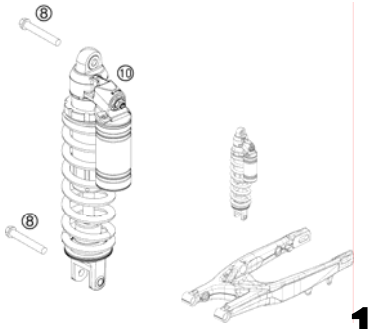

15

EXHAUST SYSTEM

16

AIR FILTER

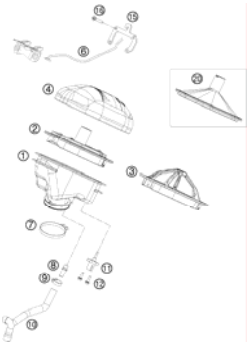

17

FUEL PUMP

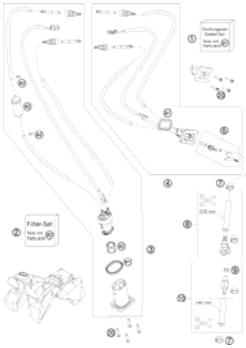

18

HUSABERG

INDEX

TANK, SEAT, COVER

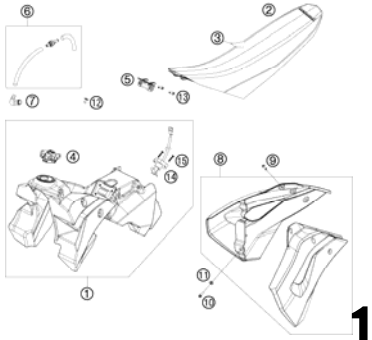

19

DECAL

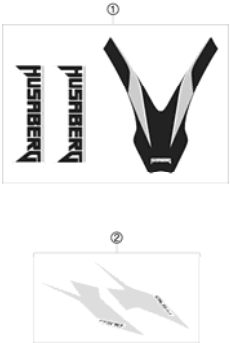

20

MASK, FENDERS

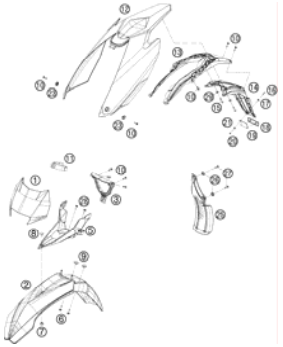

21

FRONT WHEEL

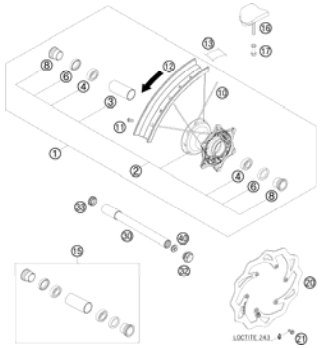

22

REAR WHEEL

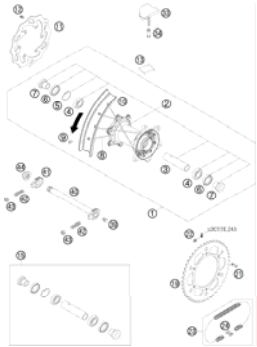

23

BATTERY

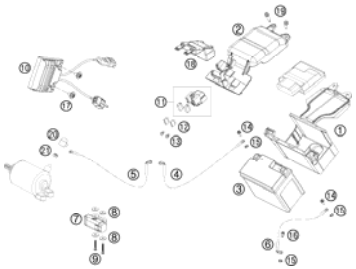

25

WIRING HARNESS

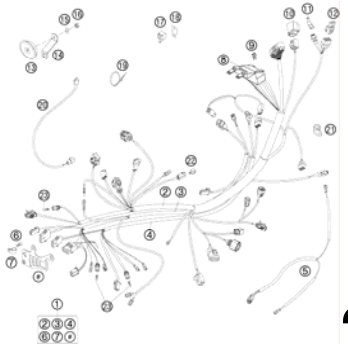

26

HAND BRAKE CYLINDER

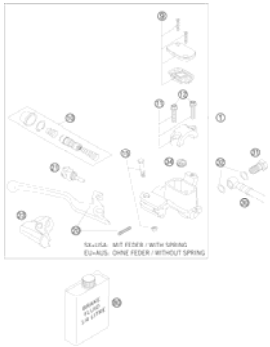

27

REAR BRAKE CONTROL

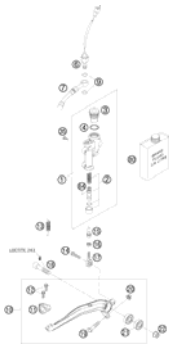

28

BRAKE CALIPER FRONT

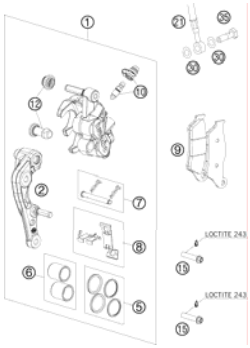

29

BRAKE CALIPER REAR

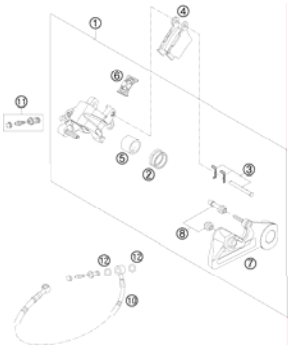

30

LIGHTING SYSTEM

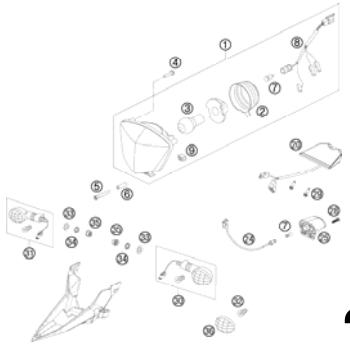

31

INSTRUMENTS / LOCK SYSTEM

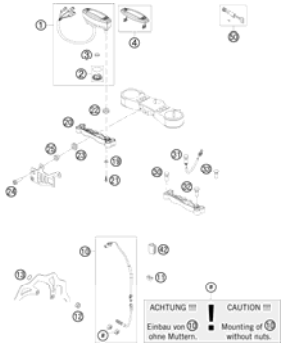

32

ACCESSORIES KIT

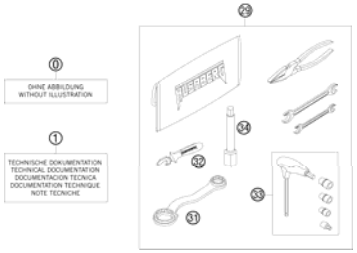

33

All information contained is without obligation. KTM-Sportmotorcycle AG particularly reserves the right to modify any equipment, technical specifications, prices, colors, shapes, materials, services, service work, constructions, equipment and the like so as to adapt them to local conditions or to cancel any of the above items, all without previous announcement and without giving reasons. KTM may stop manufacturing certain models without previous notice. KTM shall not be held liable for any deviations of availability and/or ability to deliver, illustrations, descriptions, printing and/or other errors. The illustrated models partly contain extra equipment, which is not applied to standard models.
© by KTM-SPORTMOTORCYCLE AG, Mattighofen AUSTRIA; All rights reserved; Reprint, also in extracts, with written allowance of KTM-SPORTMOTORCYCLE AG, Mattighofen only.

FRONT FORK DISASSEMBLED

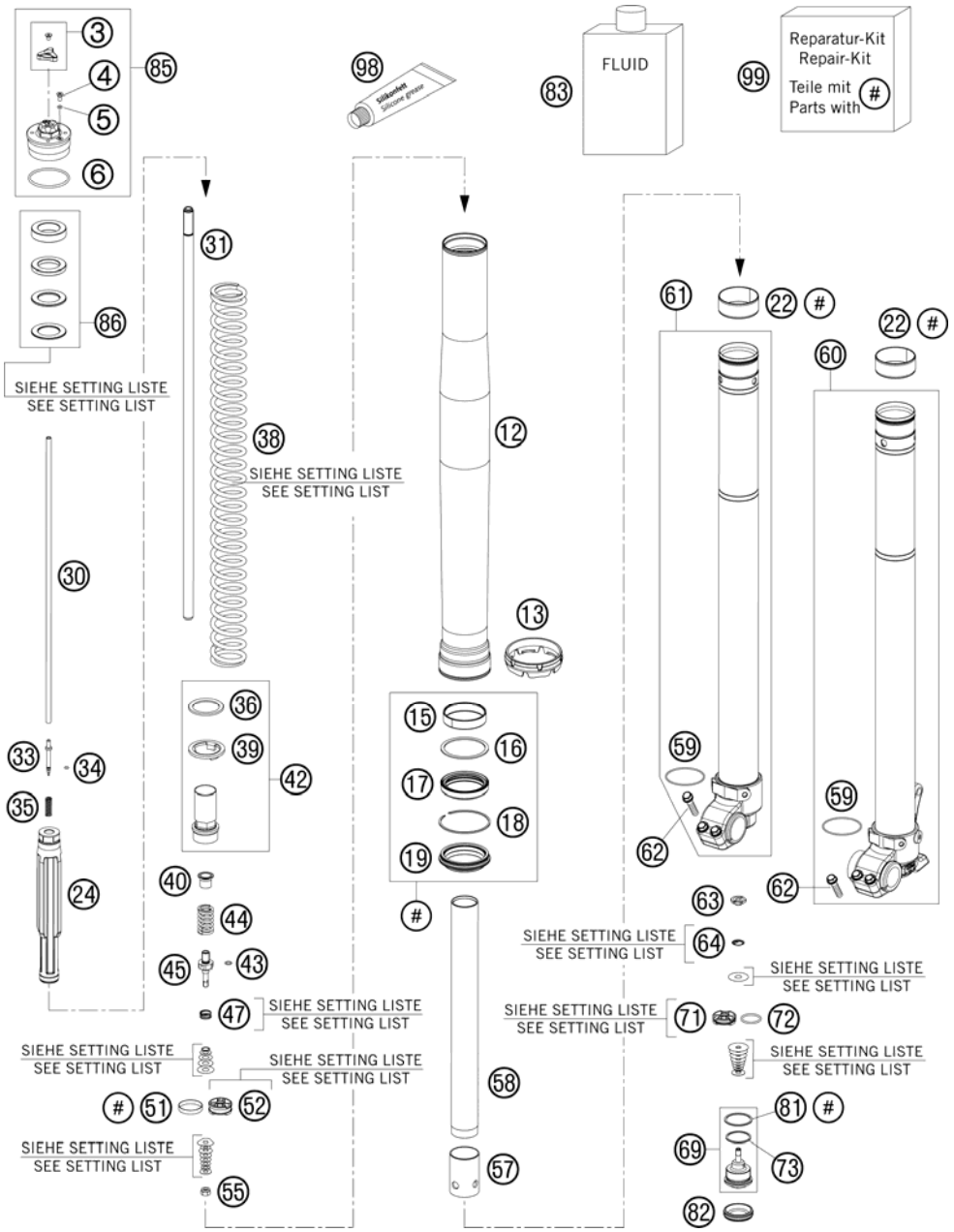

FIG	PART NUMBER	DESCRIPTION	QTY
3	48600812S	ADJUSTING KNOB + SCREW	2
4	48600481	VENT SCREW M4X8	2
5	48600046	O-RING NBR 3X1,5	2
6*	46810340	O-RING NBR 45X2	1
12	48600736	OUTER TUBE L577 D54/60MM 2L	2
13	48600698	FORK PROTECTION RING 08	2
15	48600429	DU-BUSH D48XD52X12DDL02	2
16	48600013	SUPPORT RING 50 X 57,6 X 1,5	2
17	48600347	OIL SEAL RING 48X57,8X9,5 03	2
18	48600070	LOCK WASHER SB58	2
19	48600400	DUST CAP D=48 58,4X11,8	2
22	48600428	DU-BUSH D47XD49X20DDL02	2
24	48600557S	HYDR.STOP L=200 D=31,9 CPL. 07	2
30	48600559	ADJUSTING TUBE L=520 07	2
31	48600568	PISTON ROD D=12 L=554 ALU	2
33	48600277	ADJUSTER NEEDLE 07	2
34	48600298	O-RING 2X1,5 NBR	2
35	48600444	REBOUND SPRING C=4N/MM	2
36	48600113	WASHER 32X42X2,5	2
38	91410012S	SPRING 3,8N/MM SET D=4,9MM	x
38	91410013S	SPRING 4,0N/MM SET D=5,0MM	x
38	91410014S	SPRING 4,2N/MM SET D=5,0MM	x
38	91410015S	SPRING 4,4N/MM SET D=5,1MM	x
38	91410016S	SPRING 4,6N/MM SET	x
38	91410017S	SPRING 4,8N/MM SET	x
39	48600021	INTERM. RING 26,2 X 43 X 3	2
40	48600525	GUIDING BUSH REBOUND SPRING	2
42*	48600830S	SCREW SLEEVE M27X0,8	2
43	48600299	O-RING 6X1,2 NBR	2
44	48600511	REBOUND SPRING L=32 C=17	2
45	48600576	PISTON ROD REBOUND	2
47	48600382	SHUTTLE VALVE SPRING C=0,4	2
51	48600455	PISTON RING 5X1X68	2
52	48600575	PISTON REBOUND SX 2007	2
55	40540486	NUT M6X0,5 REBOUND	2
57	48600764	ADAPTER SLEEVE D23/D28	2

105230130 / C105230130

* NEW PART

X AS REQUIRED

FRONT FORK DISASSEMBLED

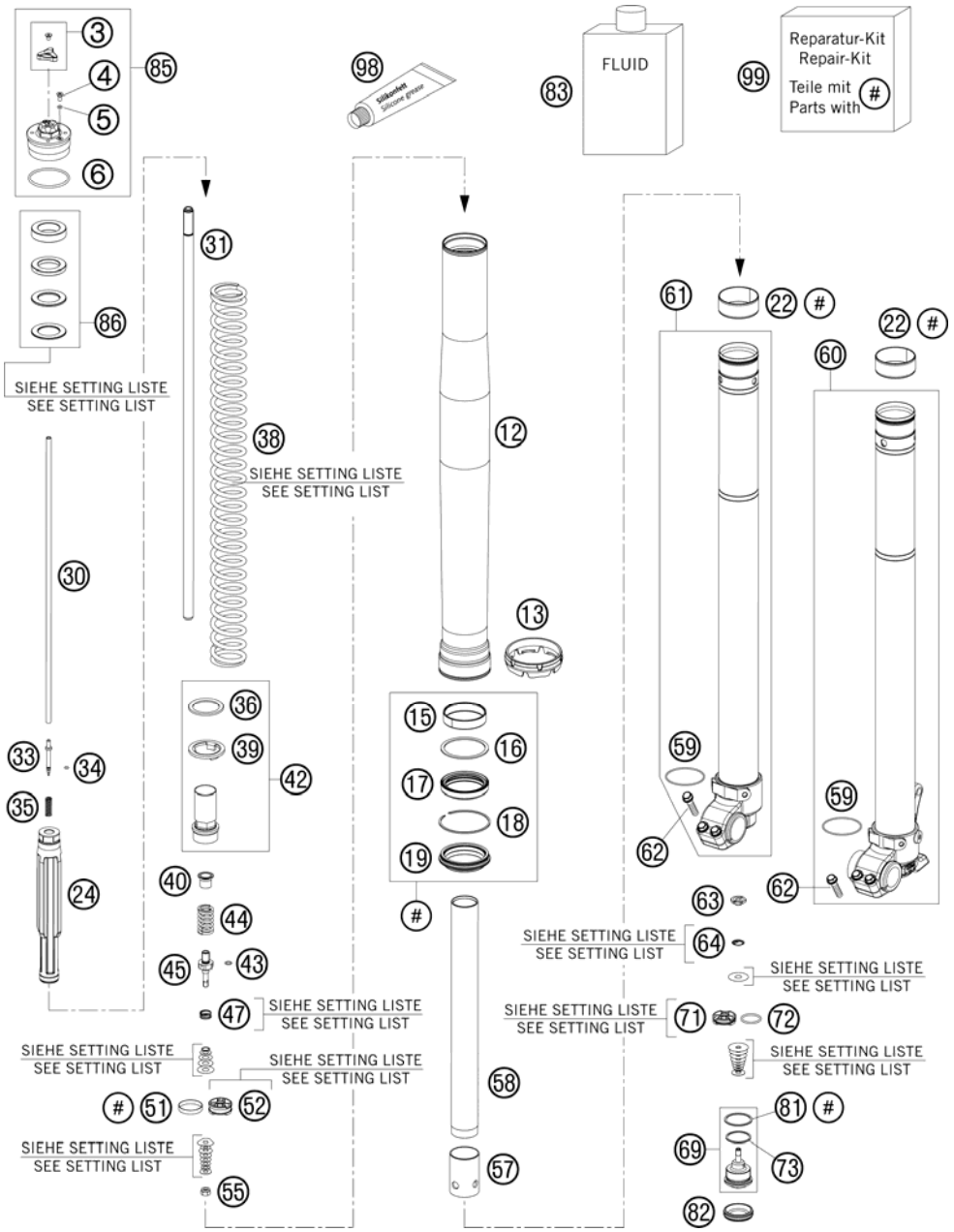

FIG	PART NUMBER	DESCRIPTION	QTY
58	48600763	PIPE D23/L350 09	2
59	48600048	O-RING NBR 46 X 2	2
60*	48600860SA	AXLE CLAMP L/S + TUBE CPL.	1
61*	48600861S1	AXLE CLAMP R/S + TUBE CPL. 09	1
62	0025080256	HH COLLAR SCREW M8X25 TX40	4
63	48600163	CHECK VALVE NUT M6X0,5 D=2	2
64	48600202	SPRING CHECK VALVE D=0,7	2
69	48600586S	TAP COMPRESSION CPL. 07	2
71	48600047	PISTON COMPRESSION D=27,9	2
72	46811499	O-RING NBR 21X2	2
73	35480320	O-RING NBR 24X2	2
81	48600004	COPPER WASHER 29,5X33,5X1	2
82	48600141	RUBBER CAP D=35MM	2
83	48600765S1	FORK OIL SAE5 5L 2008	1
85	48600431S2	PRE-LOAD ADJ. M51X1,5 09	2
86	48600036	SPACER 42X26,5X2,5	x
86	48600037	SPACER 42X26,5X5	x
86	48600038	SPACER 42X26,5X10	x
86	48600053	SPACER 42X26,5X1,5	x
98	T511	SILICONE GREASE F. DUST STRI	1
99	R14016	REPAIR-KIT EXC FRONT FORK 2009	1

105230130 / C105230130

* NEW PART

X AS REQUIRED

FRONT FORK, TRIPLE CLAMP

FE 570 EU/UK 2010

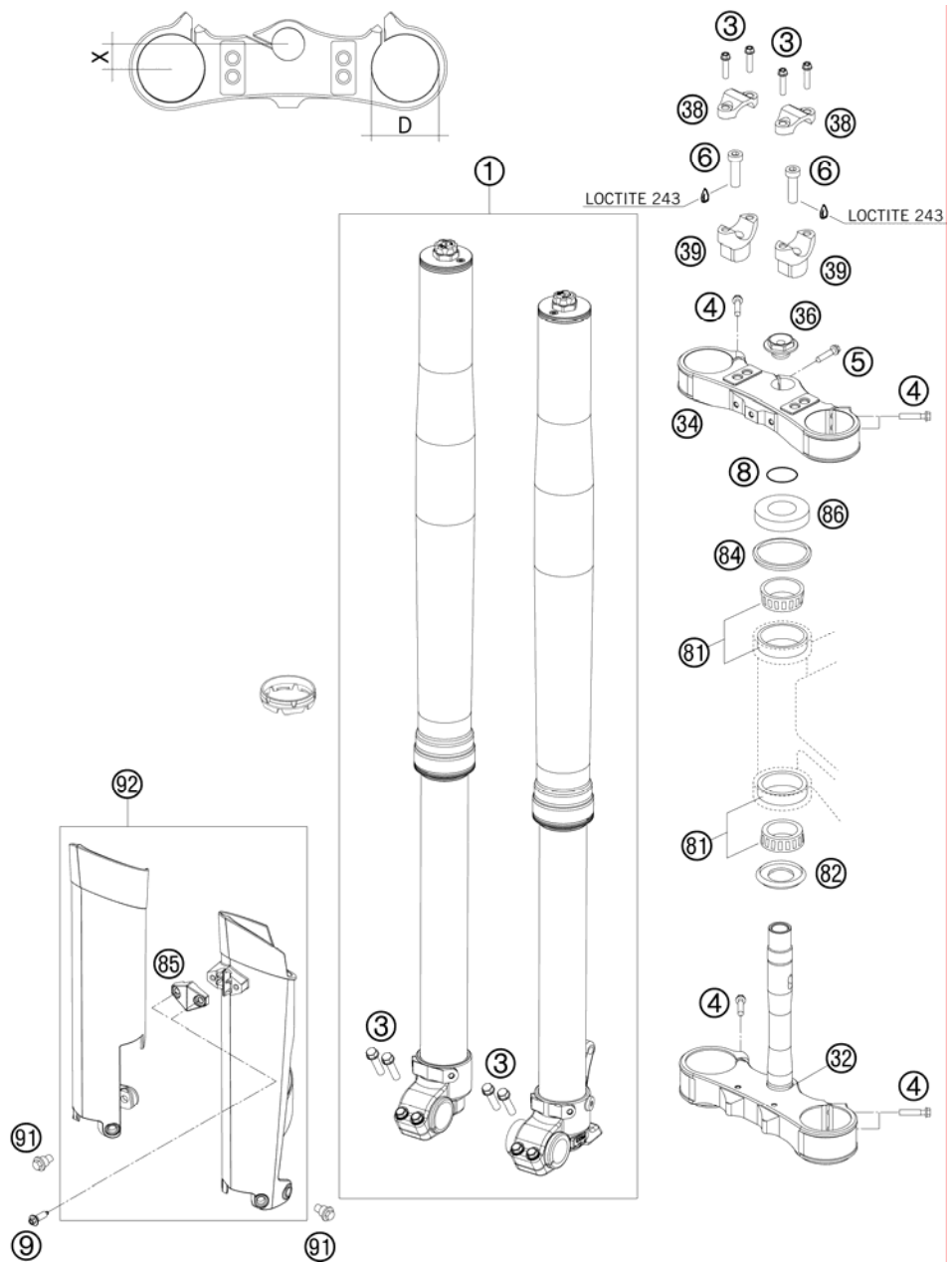

FIG	PART NUMBER	DESCRIPTION	QTY
1*	14457J0201	FORK HUSABERG FE 450	1
3	0025080256	HH COLLAR SCREW M8X25 TX40	8
4	0025080356	HH COLLAR SCREW M8X35 TX40	8
5	0025080256S	HH COLLAR SCREW M8X25 TX40	1
6	0912100356	AH SCREW DIN6912-M10X35 10.9	2
8	0770025035	O-RING 25X3,55 NBR70 05	1
9	0017060204	EJOT PT SCREW K60X20 ALU WS=6	2
32*	7800103212230	BOT. TRIPLE CLAMP CPL. 22MM	1
34*	7800103402230	TOP FORK PLATE 22MM	1
36	54801036000	STEER.HEAD SCREW M20X1,5 WS=27	1
38	59401038000	HANDLEBAR CLAMP 28MM 05	2
39	59401039037	HANDLEB.SUPP. D=28MM H=37MM 05	2
81	54201081100	TAPERED ROLLER BEARING CPL. 06	2
82	54601084100	%O-RING SUPPORT W. SEALING LIP	1
84	54601184000	STEARING HEAD GASKET TOP	1
85	7800108500028	CLAMP F. SPEED. CABLE D=6MM 08	1
86	54201086000	STEERING HEAD COVER	1
91	59001092050	SPECIAL SCREW M6X12,5 WS=8	6
92	7800109410028	FORK PROTECT. L/S+R/S WHITE 09	1

098120110 / C108120110

* NEW PART

X AS REQUIRED

HANDLEBAR, CONTROLS

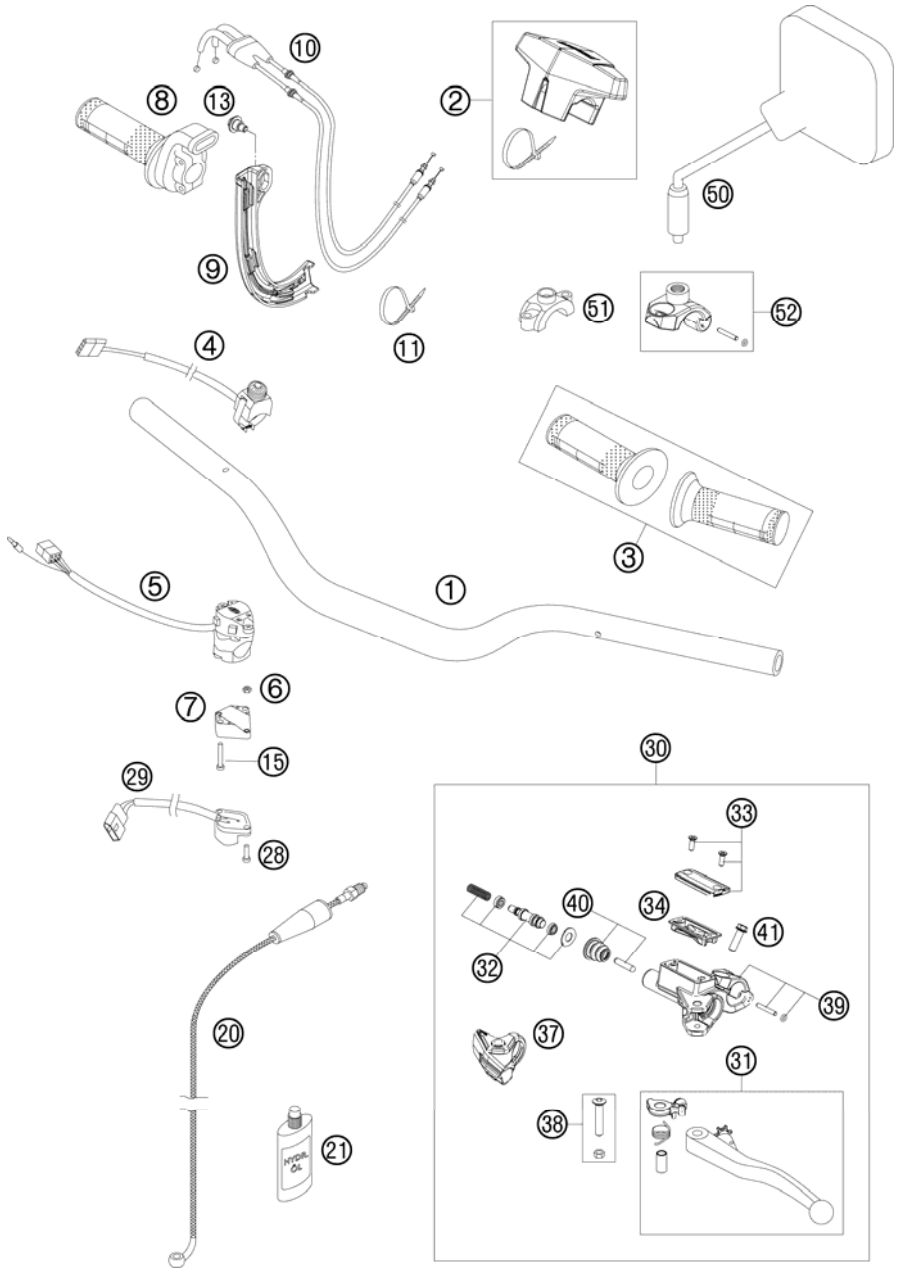

FIG	PART NUMBER	DESCRIPTION	QTY
1	59002001000	HANDLEBAR 28MM HIGH 2000	1
2	81202002000	FATBAR PAD HUSABERG 09	1
3	81202021000	GRIP SET	1
4	59411074000	STARTER CONTROL 04	1
5	50311070000	H.LIGHT SWITCH CEV 2/4TAKT '98	1
6	0934040003	HEXAGON NUT DIN0934-M 4	2
7	13011070060	ADAPTER FOR FLASHER SWITCH '98	1
8	81202010000	THROTTLE GIRP CPL. 09	1
9	81202091050	THROTTLE CABLE GUIDANCE	1
10	81202091000	THROTTLE CABLE HUSABERG 2009	1
11	44011076200	CABLE TIE 200/3,6MM BLACK	2
13	59001092050	SPECIAL SCREW M6X12,5 WS=8	1
15	0084040223	CYL.HEAD SCREW DIN0084-M 4X22A	2
20	81232063000	CLUTCH PIPE 09	1
21	50302036200	OIL FOR HYD. CLUTCH 75ML	1
28	0985040203	FLAT HEAD SCREW DIN7985-M 4X20	2
29	50311029000	FLASHER SWITCH CEV '98	1
30	50302030300	MASTER CYLINDER CPL. 9,5MM 09	1
31	50302031300	CLUTCH LEVER CPL. 2009	1
32	50302032100	REP.KIT PISTON 9,5MM 09	1
33	50302033200	COVER HYDR. CLUTCH CPL. 09	1
34	50302034100	RUBBER FOR RESERVOIR 09	1
37	50302037100	MUD CAP 09	1
38	50302038200	LEVER SCREW SHORT CPL. 09	1
39	83013005000	CLAMP, CYL. PIN, O-RING	1
40	50302046000	PUSH ROD CPL. 09	1
41	0025060166	HH COLLAR SCREW M6X16 TX30	1
50	58012040000	REAR MIRROR L/S	1
50	58012140000	REAR MIRROR R/S	1
51	58012040150	CLAMP FOR MIRROR '94	1
52*	50302044000	CLAMP FOR MIRROR CPL. 09	1

108120210 / C108120210

* NEW PART

X AS REQUIRED

ENGINE GUARD

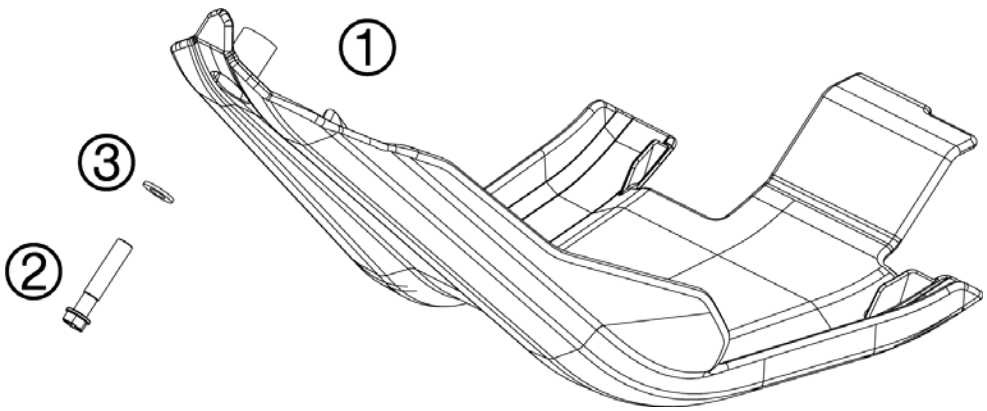

FIG	PART NUMBER	DESCRIPTION	QTY
1	81203190000	ENGINE GUARD	1
2	0025060356	HH COLLAR SCREW M6X35 TX30	1
3	0021060003	WASHER DIN9021-A 6,4	1

098120330 / C098120330

* NEW PART

X AS REQUIRED

SIDE / CENTER STAND

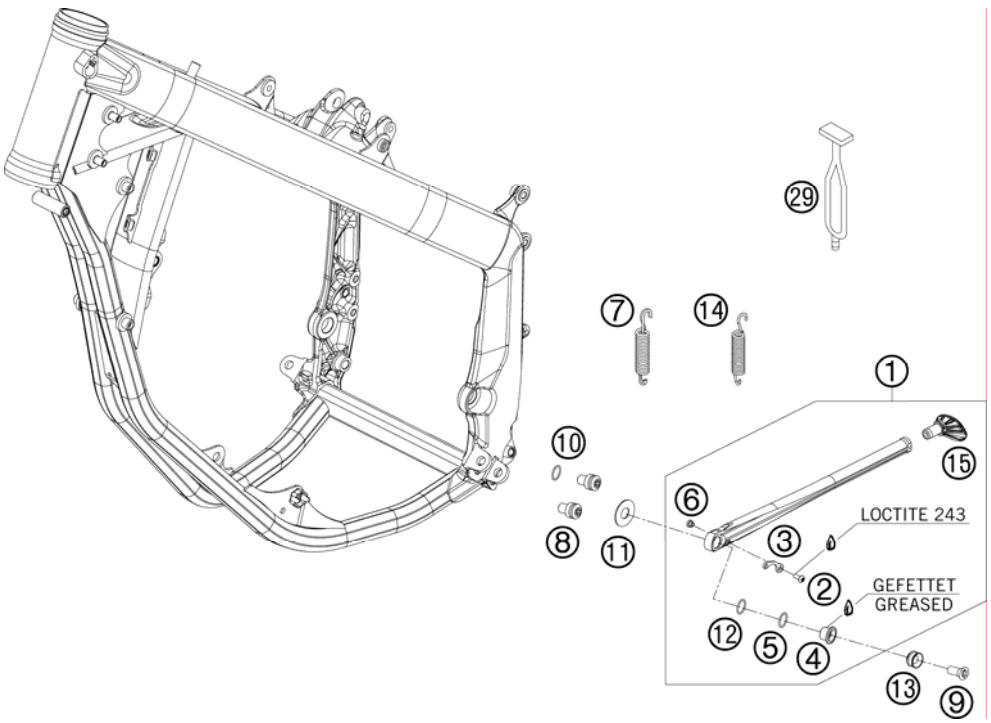

FIG	PART NUMBER	DESCRIPTION	QTY
1	78003023044	SIDE STAND CPL. 08	1
2	58605083014	SCREW M5X14 TORX 25 07	1
3	78003023090	SPRING BRACKET F. SIDE ST. 08	1
4	78003023080	SIDE STAND BUSHING EXC USA 08	1
5	0770180020	O-RING 18,00X2,00 NBR 70	1
6	78003023070	SPACER BUSH. SPRING BRACKET	1
7	81203024000	SIDE STAND SPRING EYE MOVEABLE	1
		ONLY FOR EU + AUS/UK	
8	78003023182	SIDE STAND STOP SCREW M10X12	2
9	0019080206S	FLAT HEAD SCREW M. ISA45 M8X20	1
		ONLY FOR USA	
9	0019080266S	COUNTER-SUNK SCREW ISA45 M8X26	1
		ONLY FOR EU + AUS/UK	
10	0770120020	O-RING 12,00X2,00 NBR 70	1
11	78003023083	WASHER F. SIDE STAND 12,2X29,5	1
12	0770125015	O-RING 12,5X1,5 NBR	1
13	78003023081	SIDE STAND BUSHING EXC-EU 08	1
		ONLY FOR EU + AUS/UK	
14	78003024100	SIDE STAND SPRING 08	1
		ONLY FOR USA	
15	78003023055	STAND BASE	1
29	50303018000	RUBBER L=145MM	1

098120360 / C098120360

* NEW PART

X AS REQUIRED

FRAME

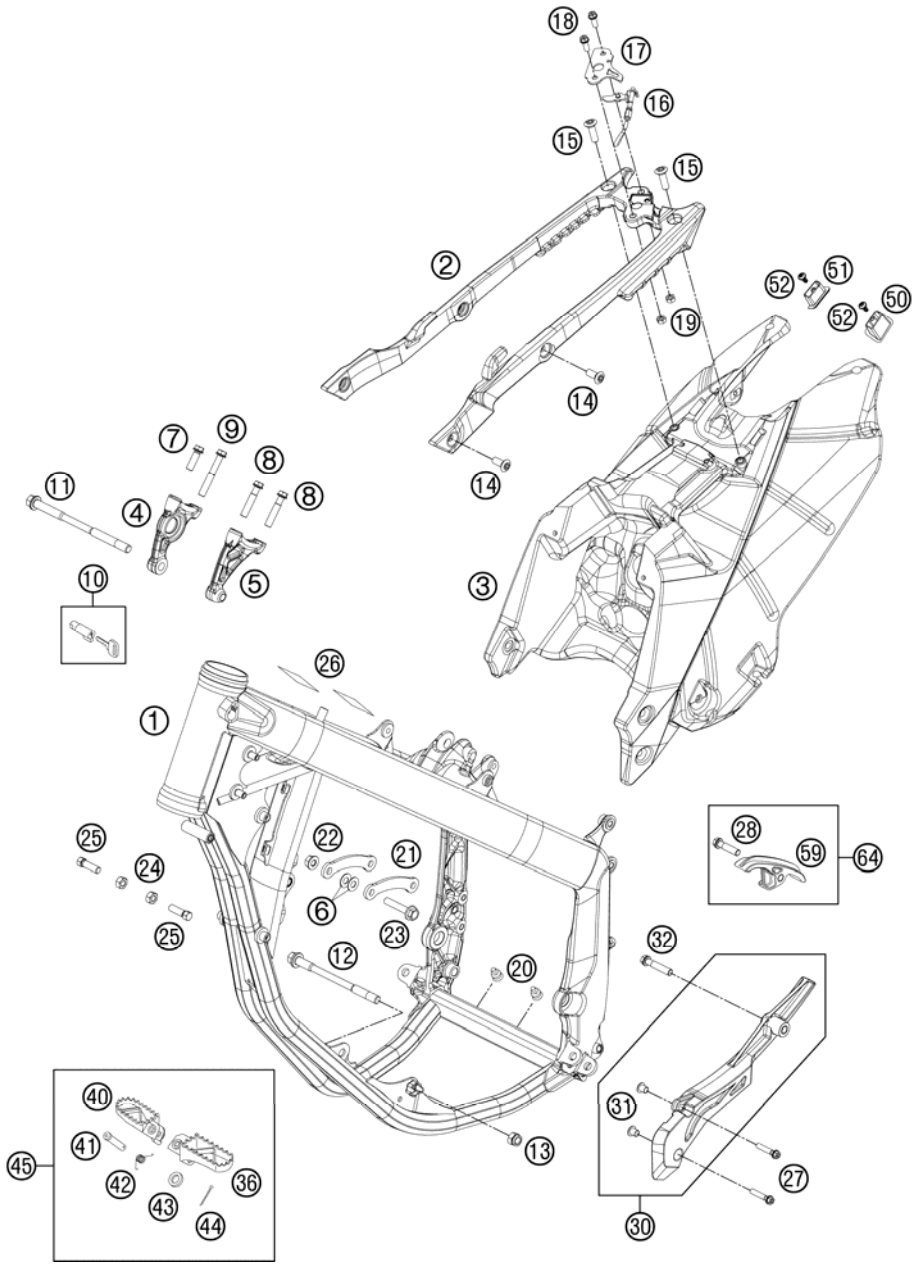

FIG	PART NUMBER	DESCRIPTION	QTY
1	8120300100056	FRAME 450 FE GREY EU "HA09"	1
2	81203003000	SUB FRAME UPPER PART 2009	1
3	81203002000	SUB FRAME 450 FE 2009	1
4	81203005010	REINFORCING B. R/S	1
5	81203005020	REINFORCING B. L/S	1
6	77003013050	WASHER 8,5X18X1 INOX	4
7	0025080256	HH COLLAR SCREW M8X25 TX40	1
8	0025080406	HH COLLAR SCREW M8X40 TX40	2
9	0025080556	HH COLLAR SCREW M8X55 TX40	1
10	78003035000	STEERING HEAD LOCK 08	1
11	58403014000	ENGINE BRAC.SCREW M10X160 WS13	1
12	83003014000	ENGINE BRACKET SCREW M10X138	1
13	54310086100	SELF LOCKING NUT M10 CU WS=14	1
14*	0019080206	COUNTER-SUNK SCREW ISA45 M8X20	4
15	0019080266	COUNTER-SUNK SCREW ISA45 M8X26	2
16	81207050010	OPERATING CABLE INCL. HINGE	1
17	81207050030	COVER PLATE SEAT LOCK	1
18	0025060166	HH COLLAR SCREW M6X16 TX30	2
19	0934060003	HEXAGON NUT DIN0934-M 6	2
20	54403135000	PLASTIC CAP SFL10	2
21	81703013000	REINFORCING BRACKET FE 570	2
22	54310086200	SELF LOCKING NUT M8 10.9	2
23	56530079000	COLLAR SCREW M8X42 WS=13 10.9	2
24	0934080003	HEXAGON NUT DIN0934-M 8	2
25	59001037000	SPECIAL SCREW M8X26 WS=10	1
26	50307012000	ADH. FOIL TRANSP. 80X80 MM 04	2
27	0025060306	HH COLLAR SCREW M6X30 TX30	2
28	0025080306	HH COLLAR SCREW M8X30 TX40	1
30	81203096000	CHAIN GUARD ´09	1
31	58314060050	SPACER BUSH. F. SPEEDOMET.BRA.	2
32	0025080406	HH COLLAR SCREW M8X40 TX40	1
36	59003040250	FOOT PEG L/S SILVER 02	1
40	59003041250	FOOT PEG R/S SILVER 02	1
41	54803044000	BOLT FOR FOOT PED 03	2
42	54603041000	FOOTREST SPRING L/S & R/S	2
43	0125100003	WASHER DIN0125-A10,5	2

108170310 / C108170310

* NEW PART

X AS REQUIRED

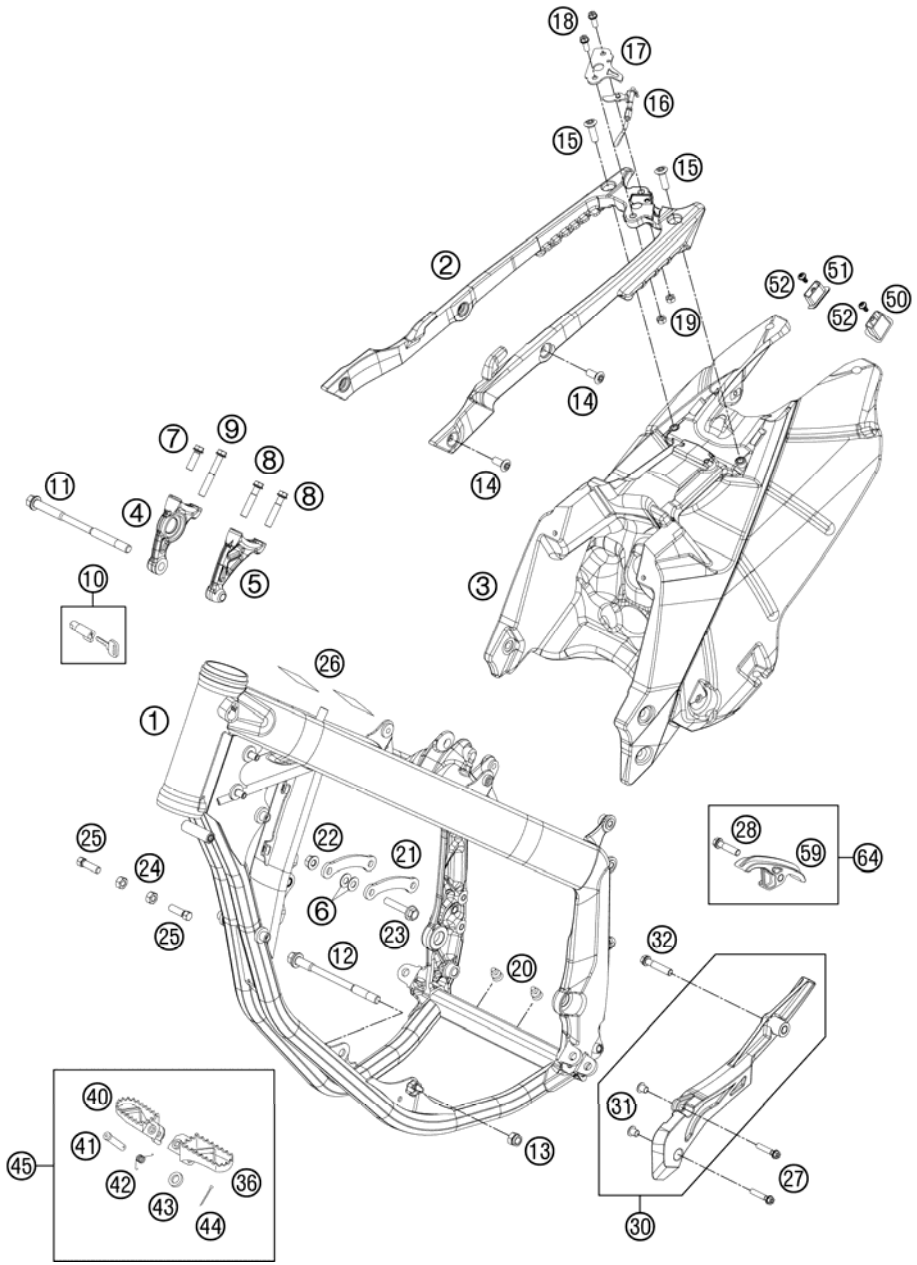

FIG	PART NUMBER	DESCRIPTION	QTY
44	0094032253	PIN DIN0094-3,2X25 STEEL	2
45	5030314013390	FOOTPEG L.+R. CPL. 03	1
50	81203002050	CAP L/S	1
51	81203002060	CAP R/S	1
52	0081050121	SCREW FOR PLASTIC K50X12 T20	2
59	77303053000	CHAIN SLIDING PIECE BELOW 07	1
64	77303053010	CHAIN SLIDING P. BELOW CPL. 07	1

108170310 / C108170310

* NEW PART

X AS REQUIRED

SWING ARM

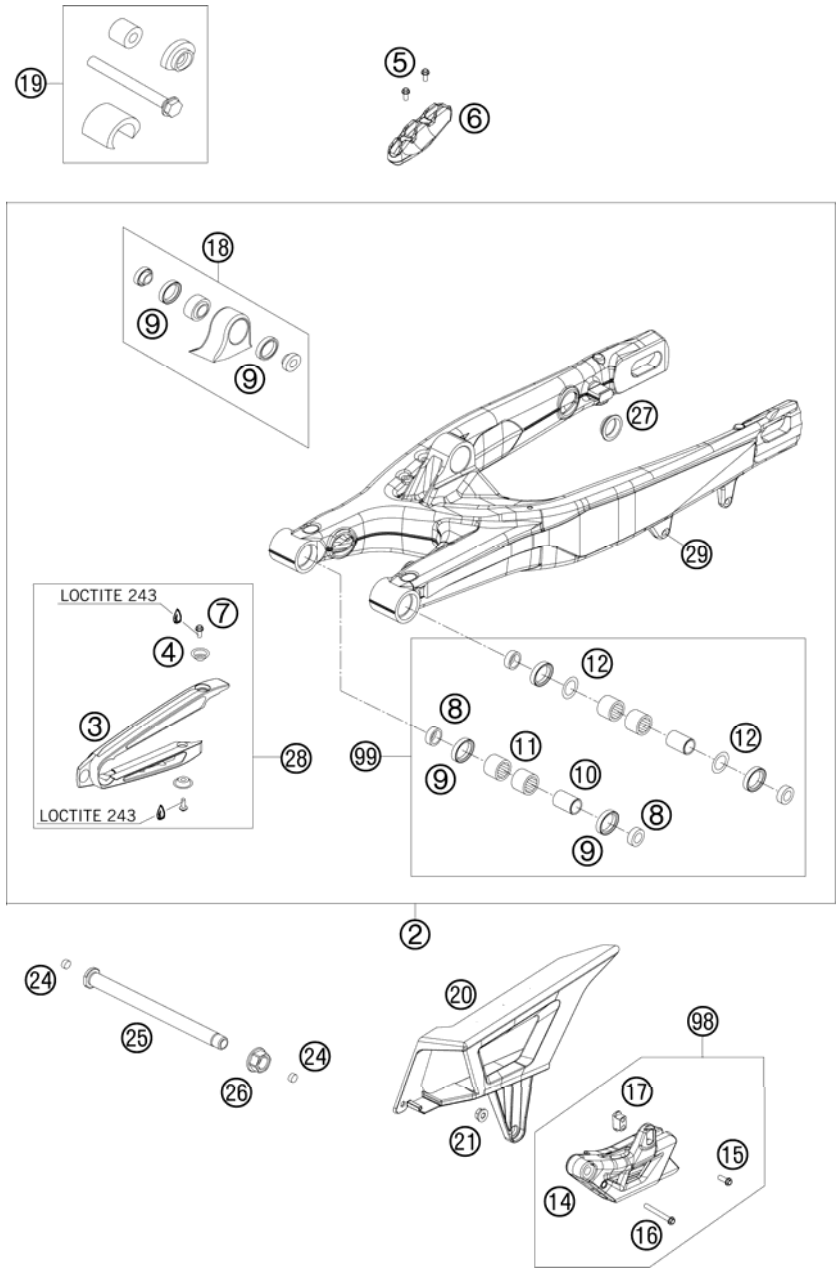

FIG	PART NUMBER	DESCRIPTION	QTY
2	78004030144	SWING ARM CPL. 08	1
3	77304066000	CHAIN SLIDING PROTECTION	1
4	77304066050	BUSHING F. CHAIN SLIDING PR.07	2
5	0009050103	SPECIAL SCREW M 5,0X10	2
6	77313047000	BRAKE HOSE GUIDE LOWER 07	1
7	59009062013	SPECIAL SCREW M6X13 WS=8 10.9	2
8	54804034000	BUCKET F. SHAFT SEAL RING 03	4
9	0760253270	SHAFT SEAL RING 25X32X7	6
10	59404032000	BEARING SLEEVE 17X22X38,7 03	2
11	59004031100	NEEDLE BEARING HK2212V	4
12	54603036000	STOP DISK 22,2X31,7X1	2
14	78004070000	CHAIN GUIDE CPL.	1
15	59009062019	SPECIAL SCREW M6X19 WS=8 10.9	1
16	0025060506	HH COLLAR SCREW M6X50 TX30	1
17	77304070030	INSERTION NUT F. CHAIN GUIDE	1
18	50304090044	PIVOT BEARING+BUSHES PDS '99	1
19	50329000044	TOOL BEARING MOUNTING PDS	1
20	78004060000	CHAIN GUARD 08	1
21	56509064100	SELF LOCKING NUT M6 10.9	1
24	55009086000	PLUG SFL13	2
25	77304037000	SWINGARM BOLT M16X1,5 07	1
26	54804038000	SELF LOCK.NUT M16X1,5 WS=19 03	1
27	58404041100	CLOSING COVER ROUND 03	4
28	77304066010	CHAIN GUARD CPL. 06	1
29	54603055051	PRESS IN NUT M6 STEEL ZINC	1
98	77304070310	CHAIN GUIDE KIT REAR 08	1
99	59404230110	SWINGARM-REPAIR KIT 05-07	1

098120490 / C098120490

* NEW PART

X AS REQUIRED

SHOCK ABSORBER DISASSEMBLED

FE 570 EU/UK 2010

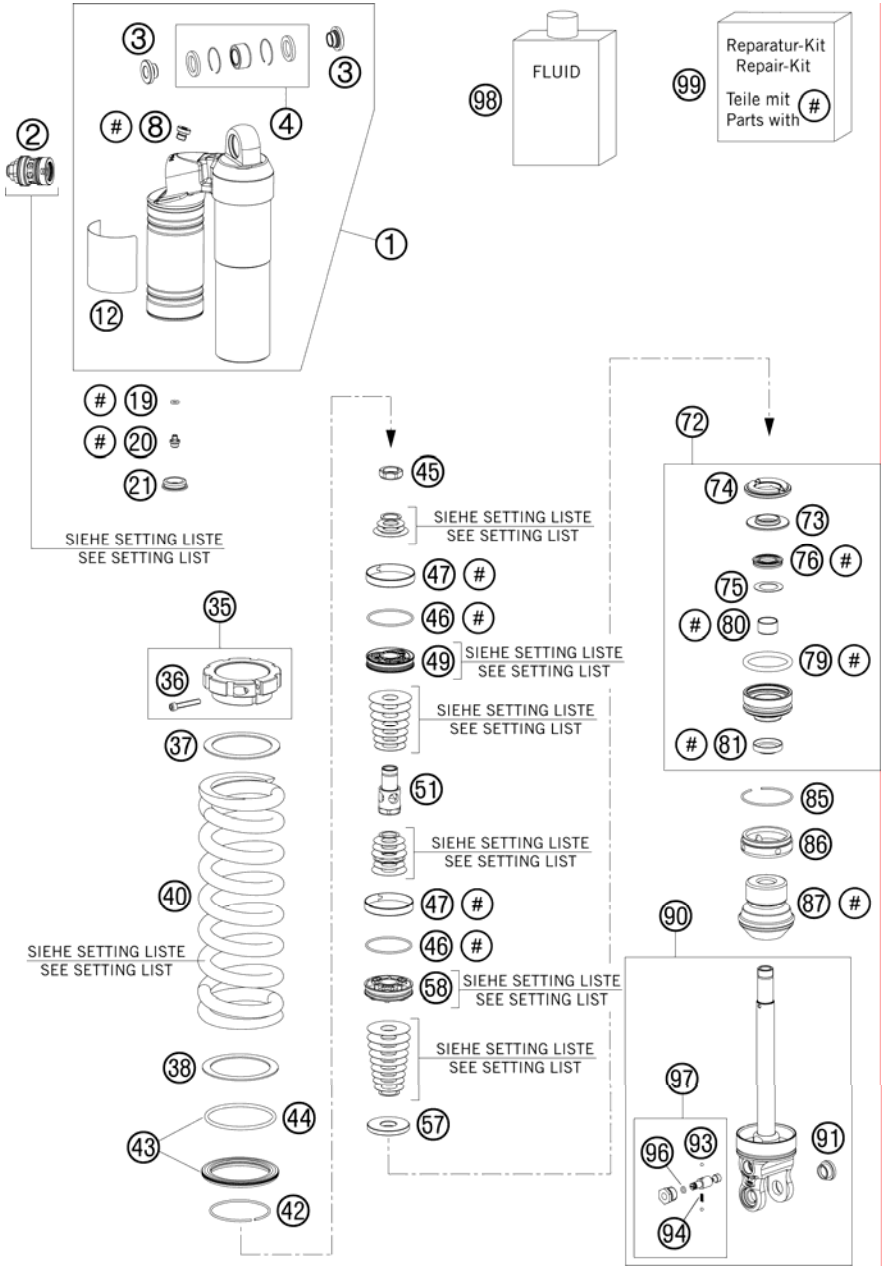

FIG	PART NUMBER	DESCRIPTION	QTY
1*	50180753SA	TOP PART CPL. 2010	1
2	50180213S10	DCC-COMPR.DAMP.CONTROL CPL. 07	1
3	46180007	ADAPTOR BUSH KGW 12X24	2
4	R12012	REP. KIT BEAR./SEAL UP. 07	1
8	50180095	BLEED PLUG R 1/8	1
12*	52000085	WP CAUTION (PDS KTM)	1
19	46810893	O-RING NBR 5,28X1,78	1
20	36120151	SCREW PLUG M5X6	1
21	46811208	RUBBER CAP "DO NOT OPEN"	1
35	50180520S	SPRING RETAINER M57,5X1 +SCREW	1
36	50180327	AH SCREW M5X30 DIN912	1
37	50180818	INTERM.RING SCREW SPRING RET.	1
38	50180114	INTERM.RING SCREW SPRING RET.	1
40	91210078S	SPRING 250 69 N/MM YELLOW	x
40	91210079S	SPRING 250 72N/MM(64/62)YELLOW	1
40	91210080S	SPRING 250 76 N/MM YELLOW	x
42	50180273	CIRCLIP 58,2X2	1
43	50180463S	SPRING RET. D=80 W. O-RING 05	1
44	50180352	O-RING VITON 66,27X3,53	1
45	50180627	PISTON ROD NUT M20X1	1
46	50180099	O-RING VITON 44,17X1,78	2
47	50180135	PISTON RING 50-8	2
49	50180675	PISTON D=20	1
51	50180764	TAP D20 M20X1 L45,3 09	1
57	50180631	REBOUND DISC D43 H0 T4	1
58	50180197	PISTON 6+6X7/4,5	1
72	50180603S	ADAPTOR CPL. D=50 H=28 08	1
73	50180113	STEEL DISC 18X,5X43,7X6	1
74	50180107	REBOUND RUBBER	1
75	50180604	SHIM D29,75 X D19 X T0,4 08	1
76	50180605S	SEAL D18X30X5 08	1
79	50180103	O-RING 41X5	1
80	46180119	DU-BUSH 18X20X12	1
81	50180606	DUST SEAL 1828 08	1
85	50180126	CIRCLIP 53X1,75	1
86	50180626	RESERVOIR CAP D=50 H=10 09	1

105230430 / C105230434

* NEW PART

X AS REQUIRED

SHOCK ABSORBER DISASSEMBLED

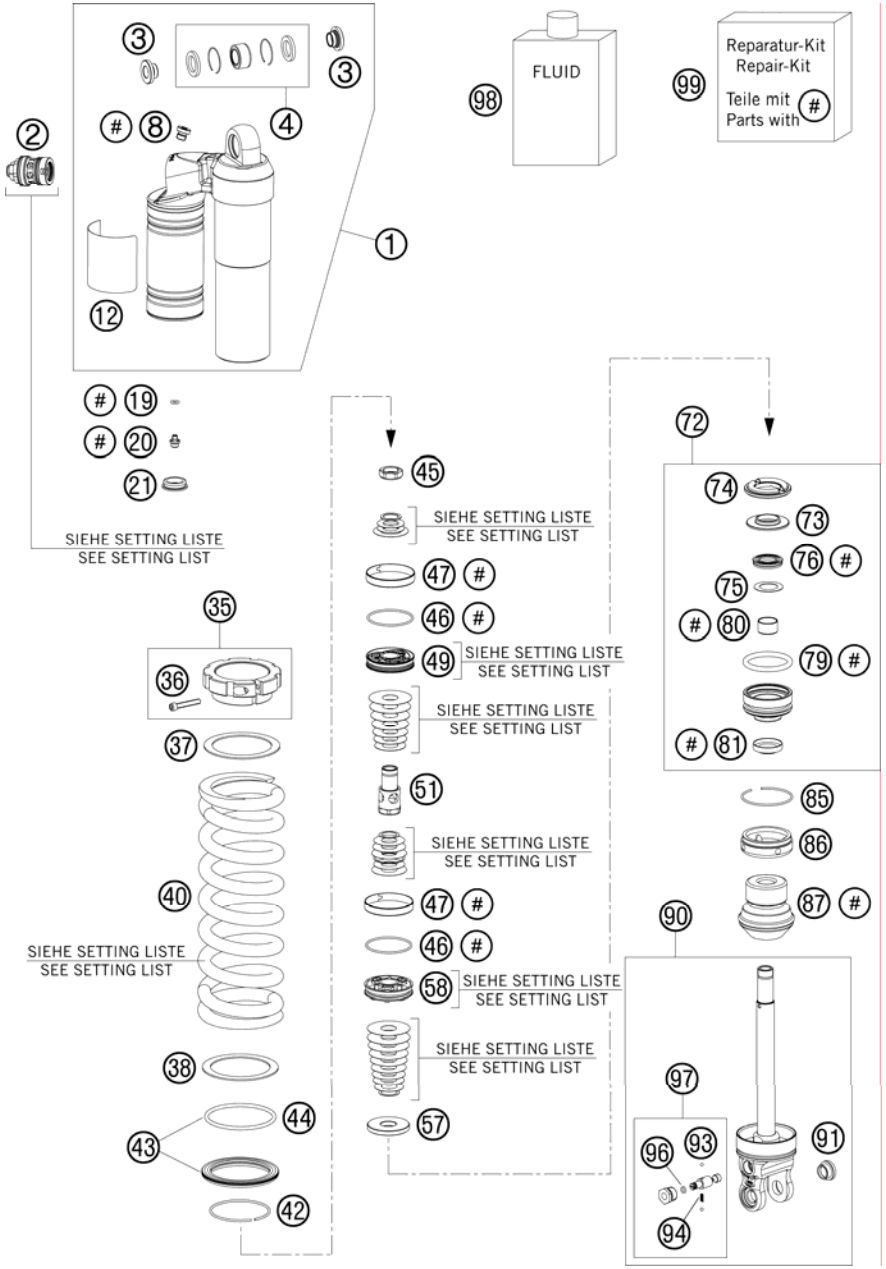

FIG	PART NUMBER	DESCRIPTION	QTY
87	50180600	BUMP RUBBER D58 D17 H59 2008	1
90*	50180512SA2	SHOCK ABS. LOWER PART CPL. 10	1
91	50180105	THREADED BUSH M12 PDS	1
93	40540603	STEEL BALL D=3MM	2
94	48600028	SPRING D=2,9 L=7,9	1
96	50180222	O-RING NBR 4X1,5	1
97	50180434S	ADJUSTING SCREW REBOUND TRAVEL	1
98	50180342S1	SHOCK ABSORBER FLUID 5 LT '03	1
99	R12015	REPAIR KIT 5018 PDS 08	1

105230430 / C105230434

* NEW PART

X AS REQUIRED

SHOCK ABSORBER

FE 570 EU/UK 2010

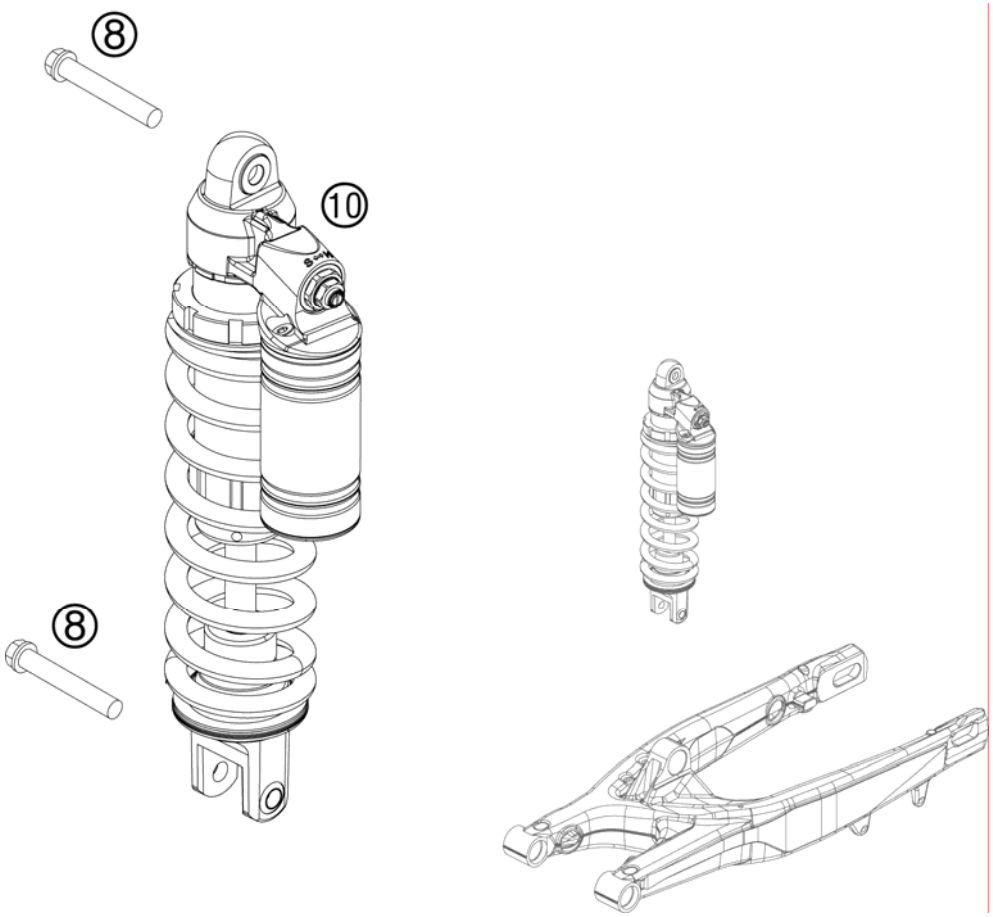

FIG	PART NUMBER	DESCRIPTION	QTY
8	0025120506S	HH COLLAR SCREW M12X50 TX45	2
10*	12457J0201	MONOSHOCK HUSABERG FE 450 2010	1

098120410 / C108120410

* NEW PART

X AS REQUIRED

EXHAUST SYSTEM

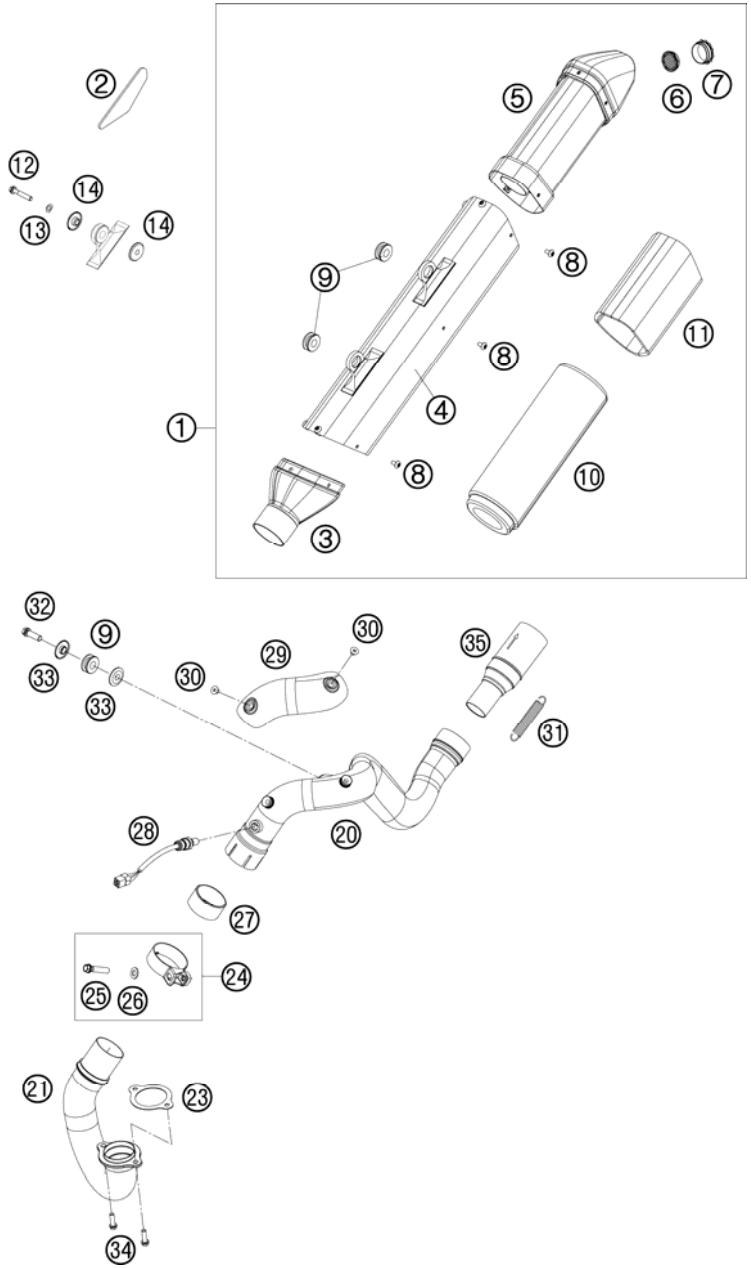

FIG	PART NUMBER	DESCRIPTION	QTY
1	81205081000	SILENCER HUSABERG	1
2	77308013050	THERMAL PROTECTION FOIL 07	1
3	77005081109	CONNECTING CAP CPL. EXC-F 08	1
4	81205081050	SILENCER JACKET HUSABERG	1
5	77005081007	ENDCAP W. SILENCER ELEMENT 09	1
6	77005081065	THROTTLE ELEMENT CPL. EXC 07	1
7	77005081055	SIL. ELEMENT EXC-F 07	1
8	58605083010	SCREW TORX M5X10 05	12
9	54605068000	EXHAUST BRACKET RUBBER BLACK	3
10	77005078315	STUFFINGYARN 315 GRAMS	1
11	77005081016	STUFFING YARN EXC-F 07	1
12	0025060356	HH COLLAR SCREW M6X35 TX30	2
13	0137060003	SPRING WASHER DIN0137-B 6	2
14	54605069000	BUSHING 7,5X12X28X7,8 '96	4
20	81205008000	EXHAUST MANIFOLD REAR	1
21*	81705007100	EXHAUST MANIFOLD FRONT 570CCM	1
23	78036041000	EXHAUST FLANGE GASKET	1
24	61005051100	CLAMP CPL. D=53,2MM 05	1
25	0025080356	HH COLLAR SCREW M8X35 TX40	1
26	0125080003	WASHER DIN0125-A 8,4	1
27	58405005001	GRAPHITRING 45X50X25	1
28	75041090000	LAMBDA SENSOR 07	1
29	81205011000	HEAT SHIELD HUSABERG	1
30	0991060082	FLAT H.SCREW M6X8 DIN7991 NIRO	2
31	50305016000	TEN.SPRING L=62MM EY.MOVEABLE	1
32	0025080256	HH COLLAR SCREW M8X25 TX40	1
33	59405069000	BUSHING FOR EXHAUST SUPPORT 03	2
34	0025060206	HH COLLAR SCREW M6X20 TX30	2
35	77005009033	CATALYST WELDED EXC 08	1

108170510 / C108170510

* NEW PART

X AS REQUIRED

AIR FILTER

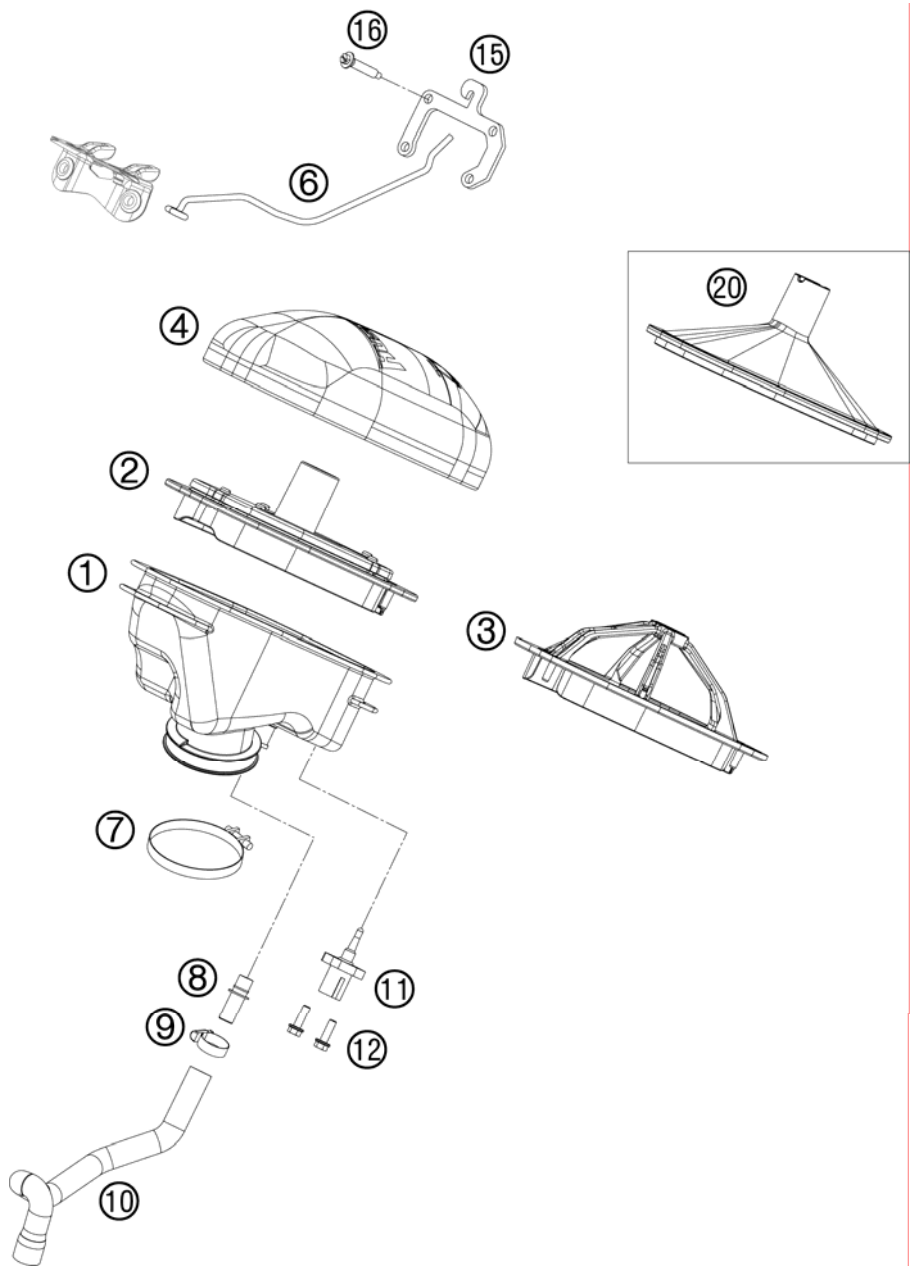

FIG	PART NUMBER	DESCRIPTION	QTY
1	81706026000	INDUCTION BOOT	1
2	81206012000	THROTTLE CAP CPL. HUSABERG 09	1
3*	81206016100	FILTER SUPPORT WITH SIEVE	1
4	81206015000	AIR FILTER 09	1
6	81206017000	FILTER FIXING BOW	1
7	78006027000	HOSE CLAMP 45-65MM	1
8	81206026020	FIXING SOCKET	1
9*	42013037400	HOSE CLAMP NORMA 12/24	1
10	81236084000	ENGINE BREATHER HOSE	1
11	61041080000	AMBIENT-AIR TEMPERATURE SENSOR	1
12	0025050166	HH COLLAR SCREW M5X16 TX30	2
15	81206019000	MOUNTNING PLATE FILTER BOW 09	1
16	0017060303	SPECIAL SCREW T60 6X30 WS=6	4
20	81206005000	AIRBOX COVER	x

098170610 / C108170610

* NEW PART

X AS REQUIRED

FUEL PUMP

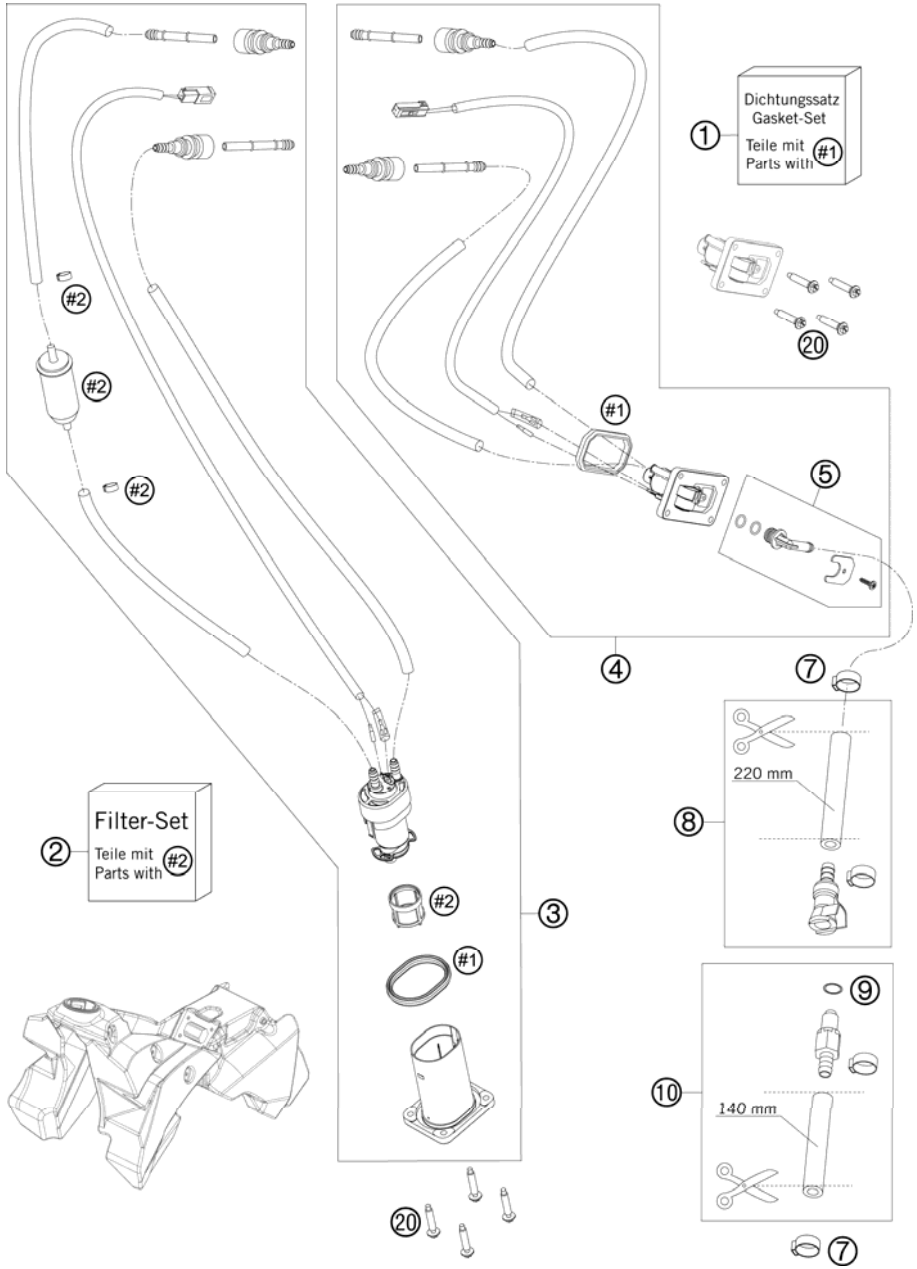

FIG	PART NUMBER	DESCRIPTION	QTY
1	75007089000	SEALINGS KIT	1
2	81207090000	FILTER KIT	1
3	81207088011	FUEL PUMP WITH FLANGE CPL.	1
4	75007088012	PRESSURE REGULATOR CPL. 07	1
5	75007092000	HYDRAULIC CONNECTOR CPL.	1
7	00050153706	VARIABLE ONE-EAR CLAMP 15,3MM	2
8	75007116060	FUEL HOSE WITH CLUTCH	1
9	58507012000	O-RING VITON F. PLUG CPC 05	1
10	75007016050	FUEL HOSE WITH CLUTCH	1
20	0017060303	SPECIAL SCREW T60 6X30 WS=6	8

098120730 / C098120730

* NEW PART

X AS REQUIRED

TANK, SEAT, COVER

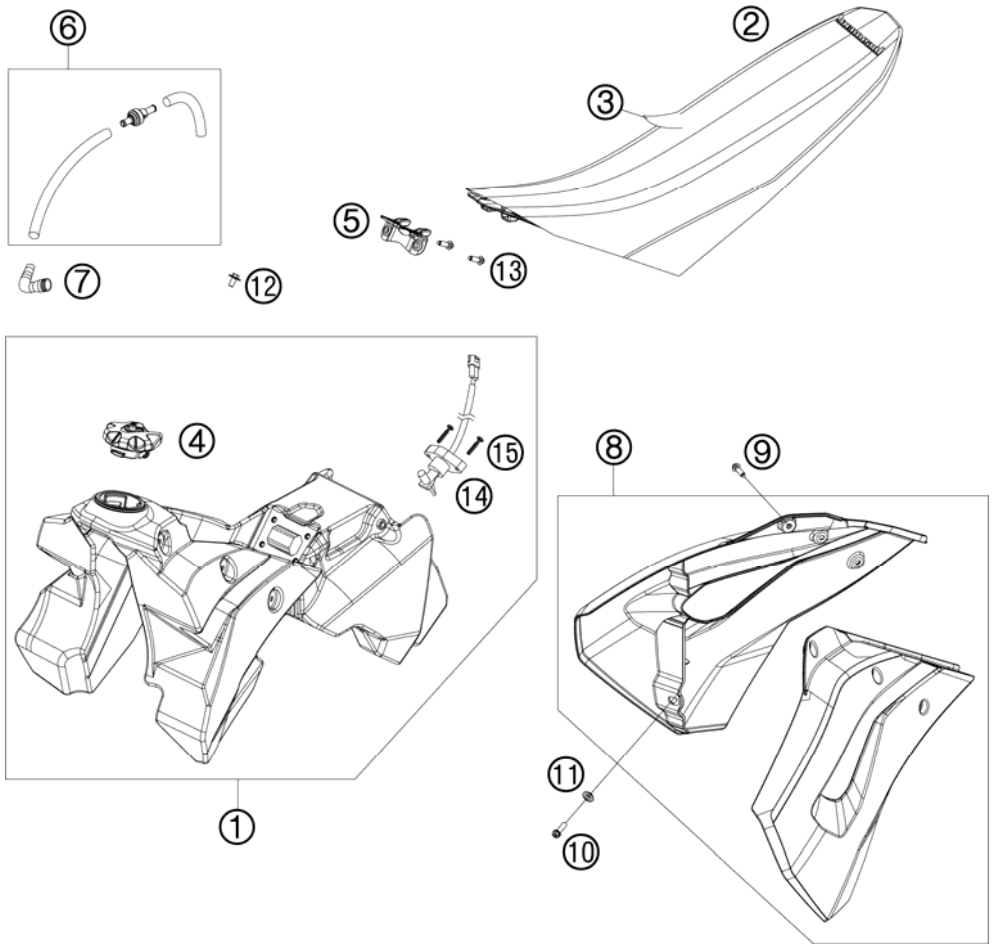

FIG	PART NUMBER	DESCRIPTION	QTY
1*	8120701314456	FUEL TANK CPL. 8,5L FE 2010	1
2	81207040000	SEAT FE 2009	1
3	81207040050	SEAT COVER FE 2009	1
4	7800700804455	TANK PLUG CPL. HUSABERG 09	1
5	81207046000	SEATMOUNTING FUEL TANK	1
6	81207029000	TANK BREAT. HOSE CPL. W. VALVE	1
7	51030022000	ANGLE PIECE 90 DEGREE M10X1	1
8	8120805400068A	SPOILER KIT BLUE FE 2009 WITH DECAL	1
9	0017060204	EJOT PT SCREW K60X20 ALU WS=6	6
10	0025060206	HH COLLAR SCREW M6X20 TX30	2
11	50308052000	BUSH FOR SPOILER 6X11X16X5 MM	2
12	0024060123	COLLAR SCREW M6X12 TX	1
13	0017060203	EJOT PT SCREW K60X20 WS=6	2
14*	58207080100	GAS-LEVEL SENSOR ADV. 2006	1
15*	0016050253	SCREW FOR PLASTIC 03	2

108120710 / C108120710

* NEW PART

X AS REQUIRED

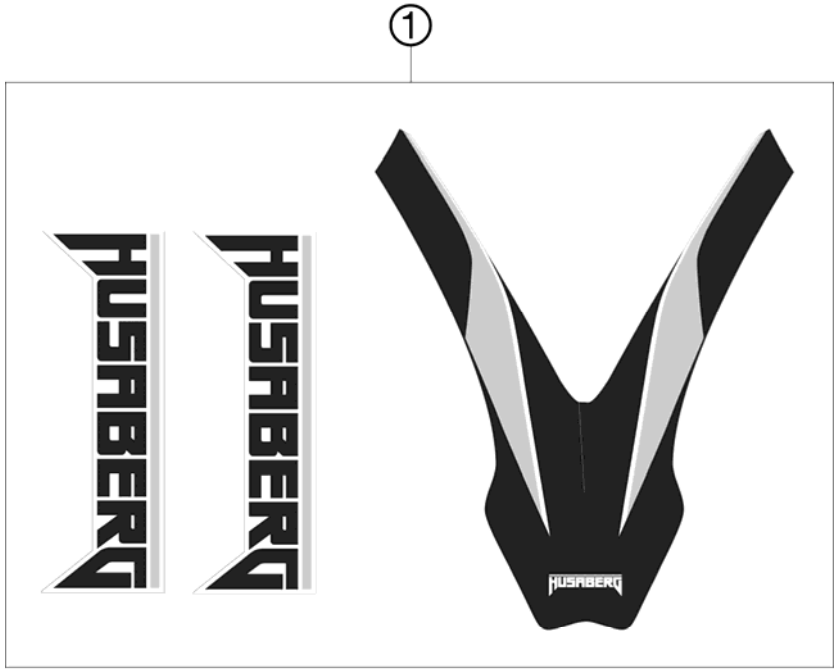

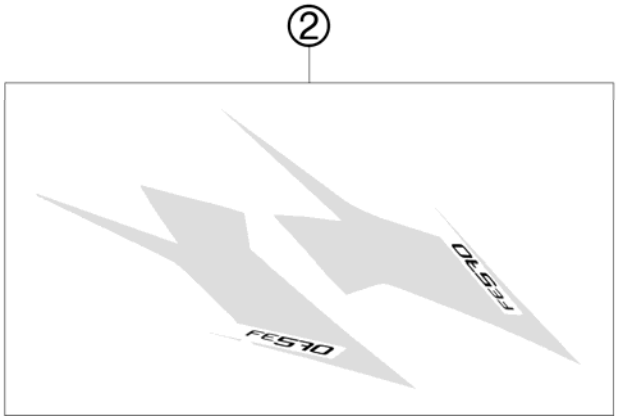

FIG	PART NUMBER	DESCRIPTION	QTY
1	81208099100	DECAL KIT HUSABERG FE 09	1
2	81708091000	DISPLACEMENT STICKER FE 570 09	1

098170830 / C098170830

* NEW PART

X AS REQUIRED

MASK, FENDERS

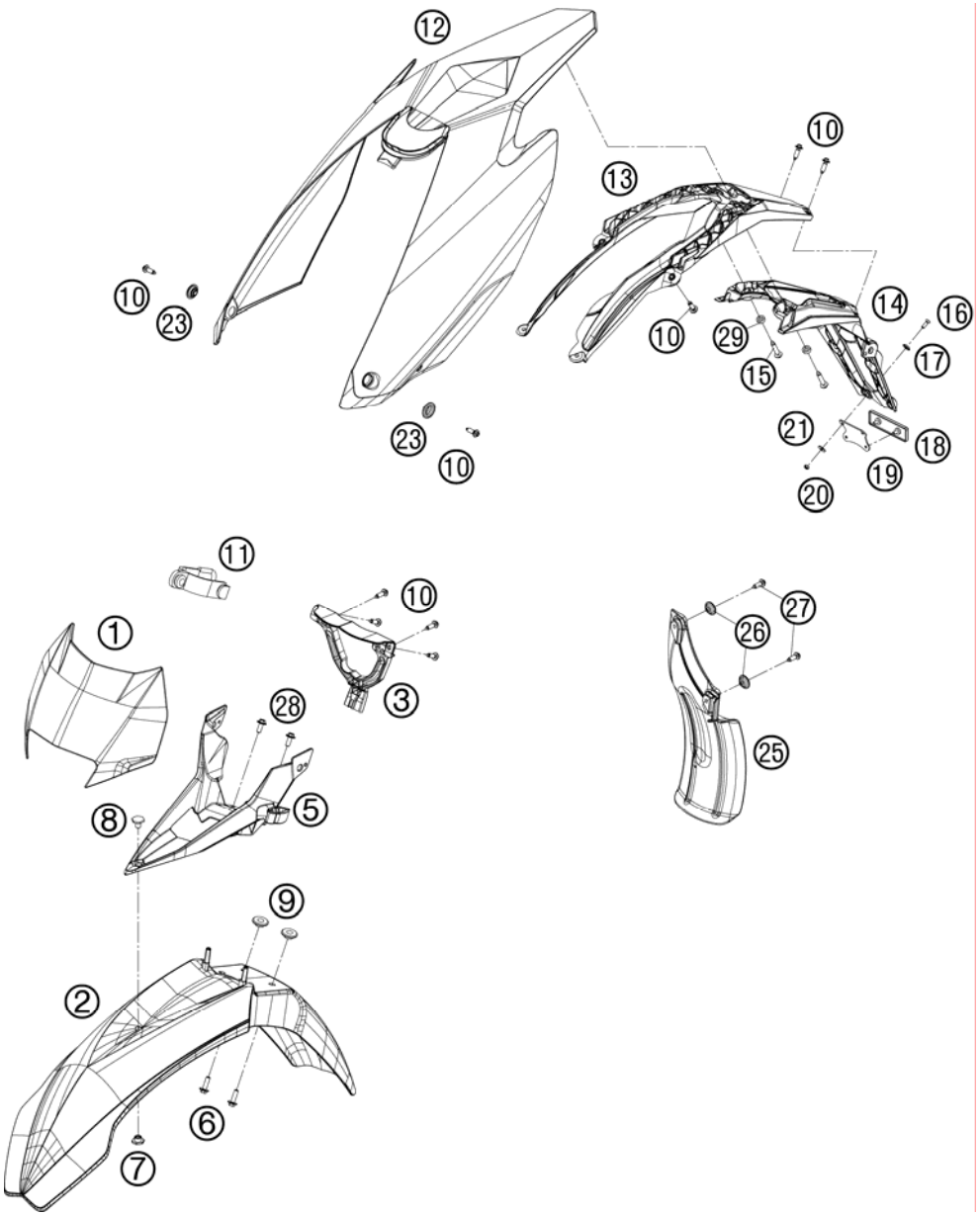

FIG	PART NUMBER	DESCRIPTION	QTY
1*	8120800110028	HEADLIGHTMASK WHITE 2010	1
2	8120801000068	FRONT FENDER 2009	1
3	81208003000	HEAD LIGHT SUPPORT 2009	1
5*	81208009100	FENDER BRACE	1
6	0024060206	HH COLLAR SCREW M6X20 TX30	4
7	50308009051	NUT FENDER BRACE M8 WS=17	1
8	50308009050	SCREW FEND.BRACE M8X9 WS=17	1
9*	54808020000	SPACER BUSHING 03	4
10	0017060203	EJOT PT SCREW K60X20 WS=6	10
11	50211086000	MASK RUBBER UFO WP '95	2
12	8120801310028	REAR FENDER HUSABERG WHITE 09	1
13	81208016000	NUMBER PLATE CARRIER	1
14	76508016050	NUMBER PLATE LO. PART 08	1
15	0017060303	SPECIAL SCREW T60 6X30 WS=6	2
16	0966050203	OVAL HEAD SCREW DIN0966-M 5X20	2
17	40006006000	WASHER 6MM	2
18	58412080000	REFLECTOR RED LC4 '98	1
19	58412080050	BRACKET FOR REFLECTOR	1
20	0985050003	SELF LOCKING NUT DIN0985-M 5	2
21	0125050003	WASHER DIN0125-A 5,3	2
23	77306001030	COLLAR BUSHING 4,5/12,6/23	2
25	77306010000	FENDER FOR FILTER BOX	1
26	77304066050	BUSHING F. CHAIN SLIDING PR.07	2
27	0017060204	EJOT PT SCREW K60X20 ALU WS=6	2
28	0024060156	HH COLLAR SCREW M6X15 TX30	2
29	12011016000	WASHER 6 X 12 X 3	2

108120810 / C108120810

* NEW PART

X AS REQUIRED

FRONT WHEEL

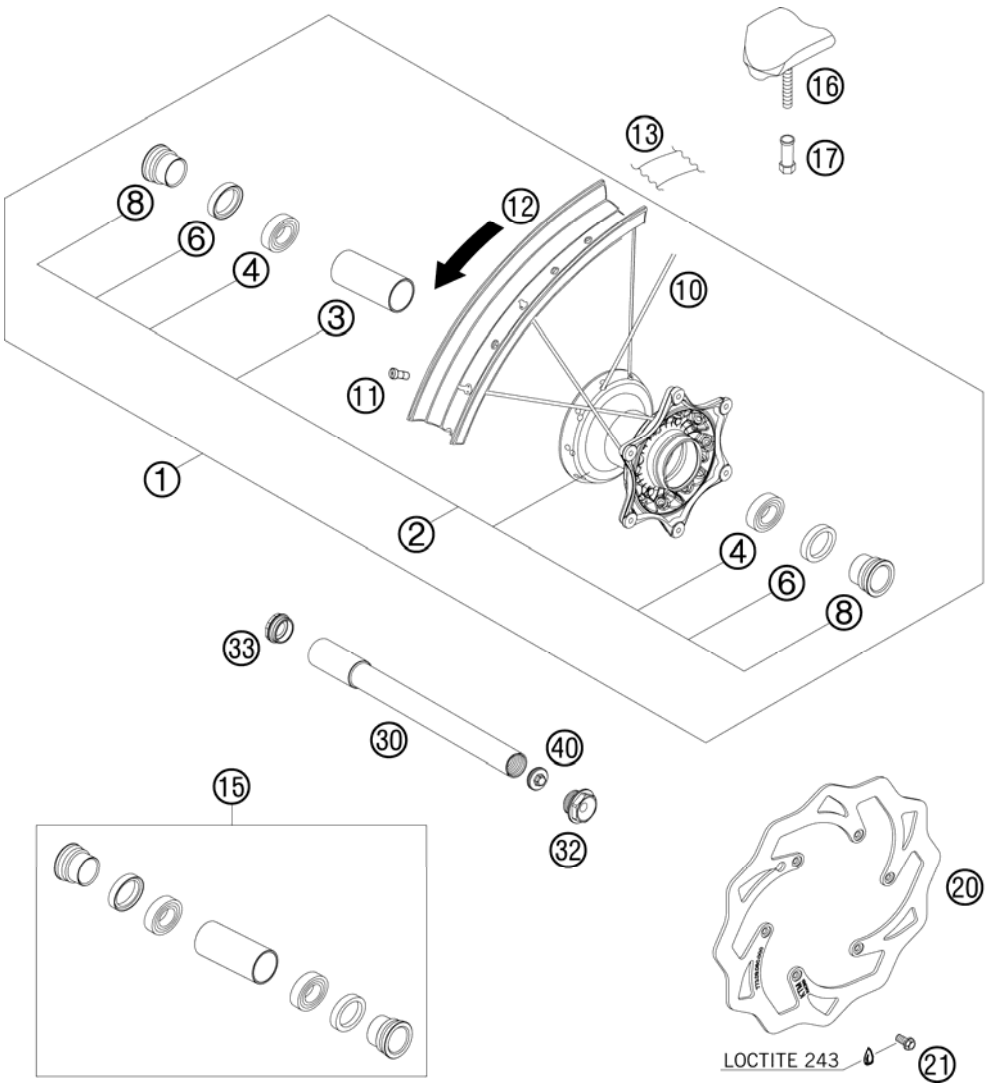

FIG	PART NUMBER	DESCRIPTION	QTY
1	8120900104468	FRONT WHEEL CPL. 450/570 FE 09	1
2	78009010044	FRONT WHEEL HUB CPL. 08	1
3	54809011000	BEA.SPACERTUBE 35X2 L=79,4 03	1
4	0625069068	GR.BALL BEAR.6906 DDU2CG23S6NM	2
6	0760354771	SHAFT SEAL RING 35X47X7 TC	2
8	78009012000	SPACER BUSHING F. FR. WHEEL 08	2
10	78009174226	SPOKE M4,5x226-21" 08	36
11	50309072100	SPOKE NIPPLE M4,5X0,75 8X21	36
12	8120907010068	RIM FRONT 1,6X1" DID AL7 BLUE	1
13	50309073000	RIM BAND 21"	1
15	78009015000	FRONT WHEEL REP. KIT	x
16	51009100100	RIM LOCK VM1 (1,60")	1
17	50310090050	NUT FOR WHEEL HOLDER '96	1
20	77309060000	BRAKE DISC FRONT 260	1
21	59009062013	SPECIAL SCREW M6X13 WS=8 10.9	6
30	77309081000	WHEEL SPIN.FR. D=26 M24x1,5 07	1
32	54809082000	SPINDLE SCREW M24X1,5 WS=27 03	1
33	54809081050	PLUG BUSHING WS=27 03	1
40	54809081070	AUXILIARY SCREW FRONT 06	1

098120910 / C098120910

* NEW PART

X AS REQUIRED

REAR WHEEL

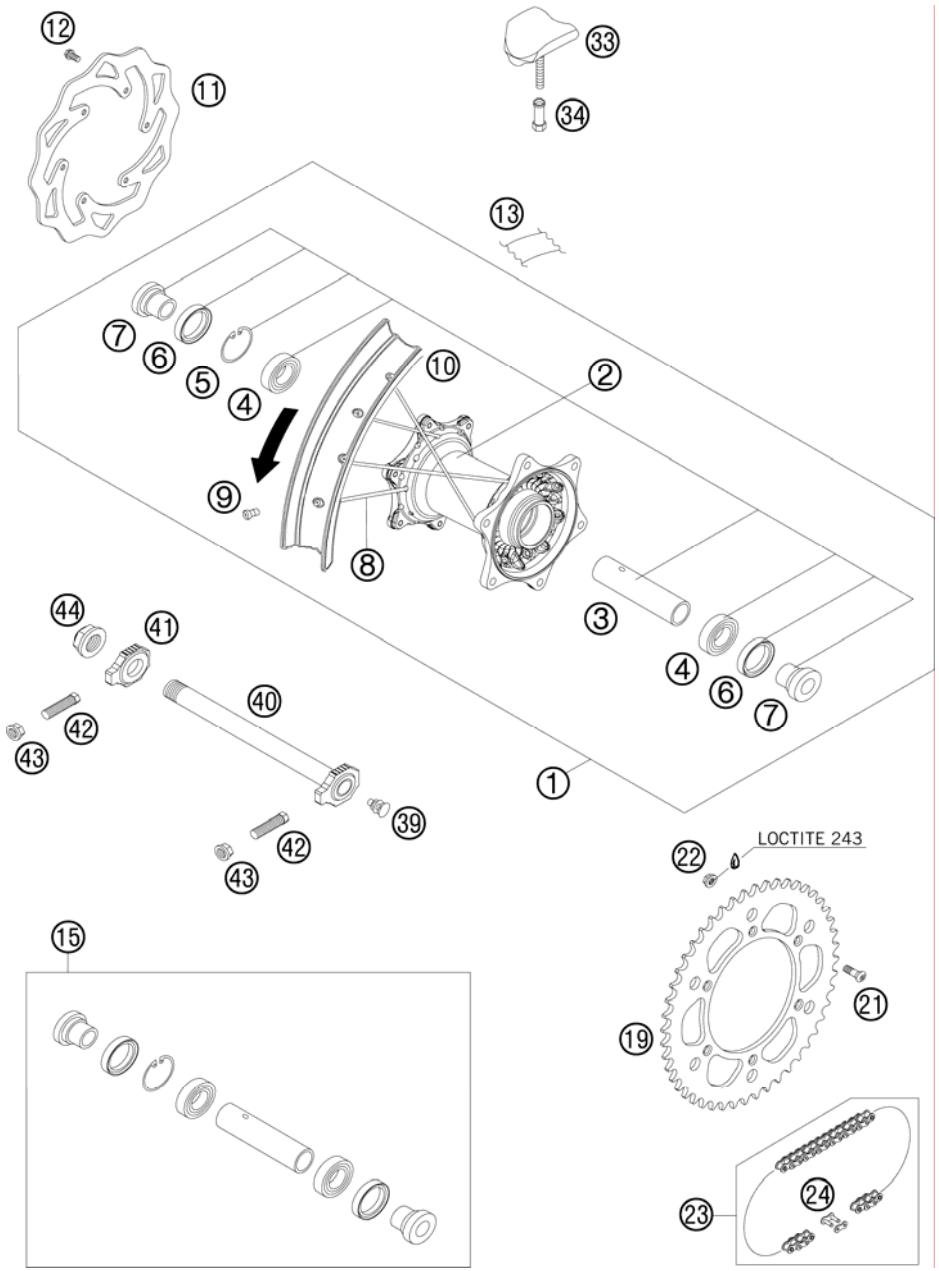

FIG	PART NUMBER	DESCRIPTION	QTY
1	8121000104468	REAR WHEEL CPL. 450/570 FE 09	1
2	78010010044	REAR HUB CPL. 08	1
3	59010011000	BUSHING SPACER TUBE 121,5MM 01	1
4	0625060058	GR.BALL BEAR.6005 DDU2CG23S6NM	2
5	0472047175	CIRCLIP DIN0472-47X1,75	1
6	0760324771	SHAFT SEAL RING 32X47X7 BSL	2
7	78010016000	BUSHING FOR HUB 08	2
8	78010174193	SPOKE M5X193- 18"	36
9	58309072100	SPOKE NIPPLE M5-TA 8X21MM	36
10	8121007010068	RIM 2,15X18" DID AL7 BLUE	1
11	77310060000	BRAKE DISC REAR 220	1
12	59009062013	SPECIAL SCREW M6X13 WS=8 10.9	6
13	50310073200	RIM BAND 18" AND 19"	1
15	78010015000	REAR WHEEL REP. KIT	x
19	58310051038	REAR SPROCKET 38-T	x
19	58310051042	REAR SPROCKET 42-T	x
19	58310151040	REAR SPROCKET 40-T	x
19	58310151045	REAR SPROCKET 45-T	x
19	58310151048	REAR SPROCKET 48-T	x
19	58310151049	REAR SPROCKET 49-T	x
19	58310151050	REAR SPROCKET 50-T	x
19	58310151051	REAR SPROCKET 51-T	x
19	58310151052	REAR SPROCKET 52-T	x
21	0019080266S	COUNTER-SUNK SCREW ISA45 M8X26	6
22	06923080003	HEXAGON NUT DIN EN1661 M8 SW13	6
23	50310165118	CHAIN 5/8X1/4" MX	1
23*	78010167118	CHAIN DID 118 ROLLS	1
24	50310166000	CONNECTING LINK F. 50310165118	1
24*	78010166000	CONNECTING LINK F. 78010167118	1
33	54010100100	RIM LOCK VM3 (2.15")	1
34	50310090050	NUT FOR WHEEL HOLDER '96	1
39	50210086000	COVERING CAP SFL16	1
40	77310085044	WHEEL SPINDLE RE. CPL.265MM 07	1
41	50310084000	CHAIN TENSIONER R/S 2000	1
42	50304040100	SCREW M10X1,25X50 WS=10	2
43	58414030000	HH COLLAR NUT M10X1,25 WS=13	2

098121010 / C108121010

* NEW PART

X AS REQUIRED

REAR WHEEL

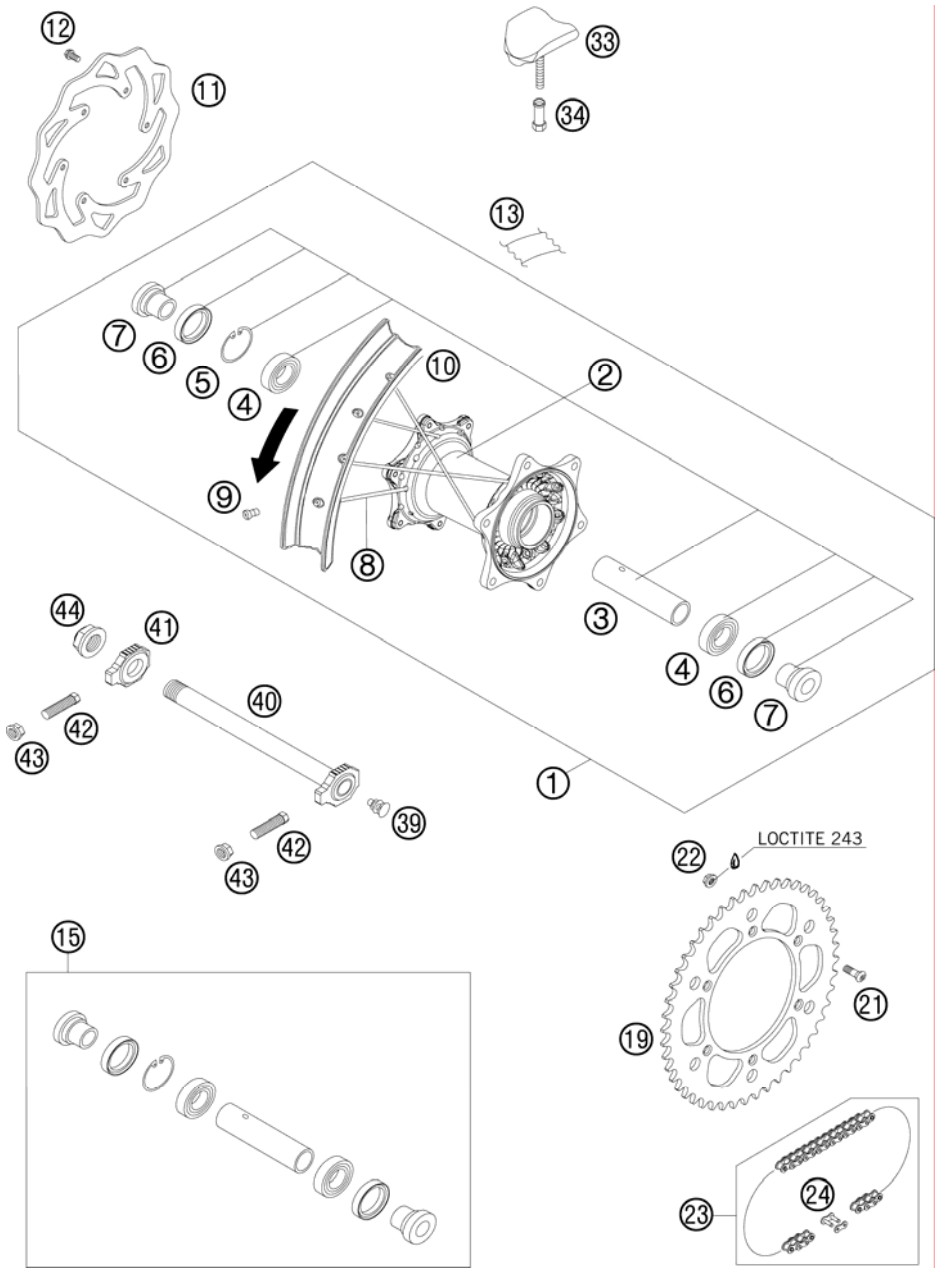

FIG	PART NUMBER	DESCRIPTION	QTY
44	50310099000	HEXAGON NUT M20X1,5 '98	1

098121010 / C108121010

* NEW PART

X AS REQUIRED

BATTERY

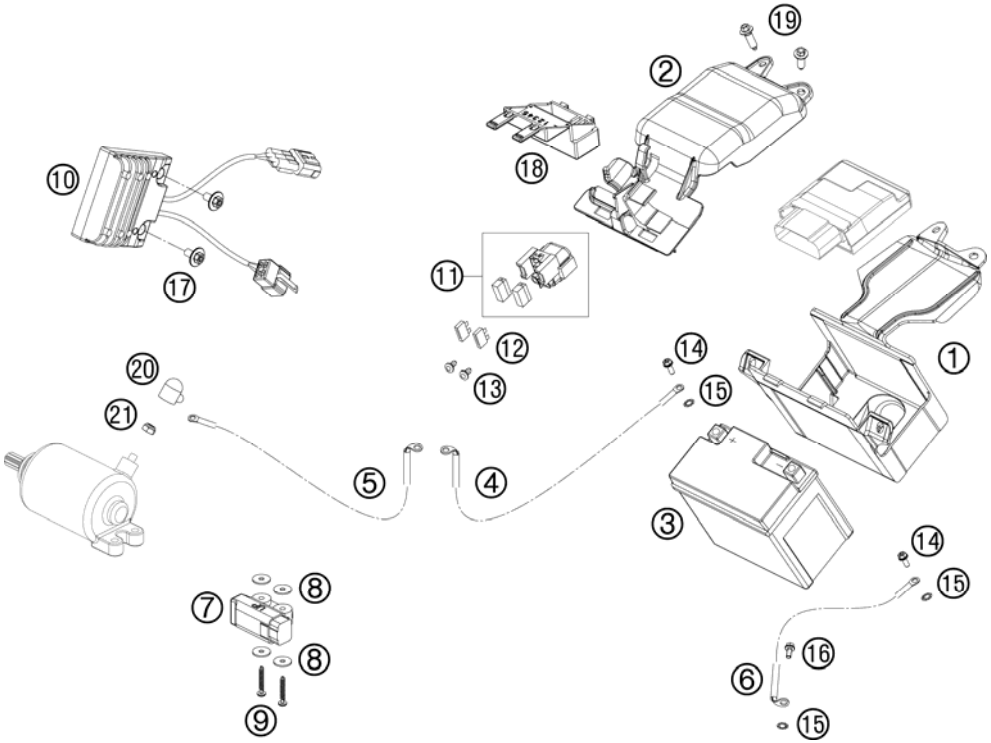

FIG	PART NUMBER	DESCRIPTION	QTY
1	81211054000	BATTERY COMPARTMENT	1
2	81211054010	BATTERY COVER	1
3	80011053000	BATTERY 12V/7AH 04	1
4	81211059050	STARTER CABLE BATTERY-RELAY	1
5	81211059000	STARTER CABLE STARTER	1
6	81211097000	GROUND CABLE	1
7	61041088000	ROLLOVER SENSOR 05	1
8	61041088050	SHIM 4,3X15X1,25MM GALVANIZED	4
9	0081400253	PLASTIC SCREW KA40X25WN1412	2
10	81211034000	VOLTAGE REGULATOR EFI	1
11	58211058000	STARTER RELAY 12V '99	1
12	58011109120	FUSE 20 A	2
13	0902060083	AH OVAL SCREW ISO 7380 M 6X8	2
14	0025050126	HH COLLAR SCREW M5X12 TX30	2
15	58411098100	CONTACT WASHER M6 VSV-K6	3
16	0025060126	HH COLLAR SCREW M6X12 TX30	1
17	0024060123	COLLAR SCREW M6X12 TX	2
18	58411087050	RUBBERCOVER F.LOCKHOLDER	1
19	0017060204	EJOT PT SCREW K60X20 ALU WS=6	1
20	58440099000	PROTECTION CAP F. STARTER ENG.	1
21	0985060003	SELF LOCK. NUT DIN0985-M 6	1

098121130 / C098121130

* NEW PART

X AS REQUIRED

WIRING HARNESS

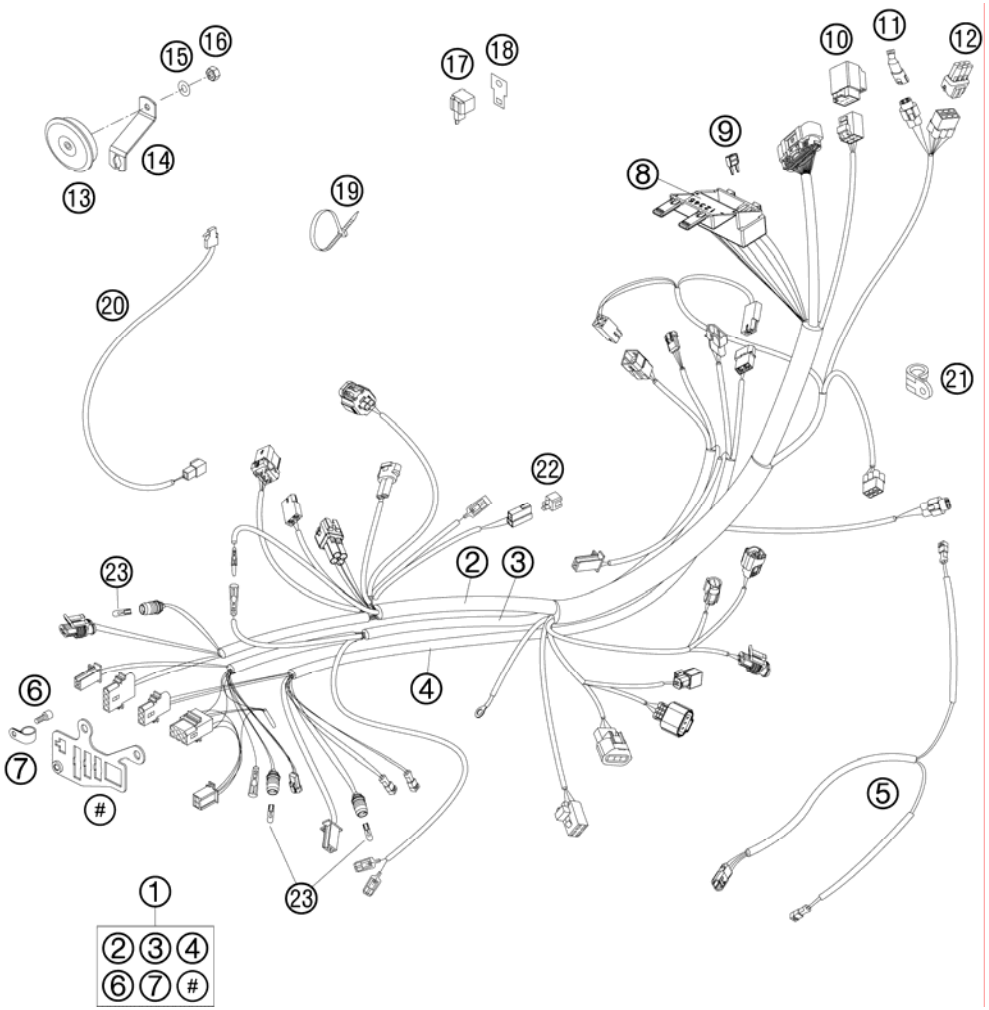

FIG	PART NUMBER	DESCRIPTION	QTY
1*	81211075150	MAIN WIRING HARNESS CPL. 2010	1
2*	81211075110	WIRING HARNESS 2010	1
3*	81211075120	WIRING HARNESS LIGHT 2010	1
4*	81211075130	WIRING HARNESS FLASHER 2010	1
5*	81211081000	REAR FLASHER WIR. HARNESS 2010	1
6	0912050083	AH SCREW DIN 912 M 5X8	1
7	57013070000	PVC-CLAMP 7/16" HEYCO 3377	1
8	58411087050	RUBBERCOVER F.LOCKHOLDER	1
9	75011088010	FUSE 10A 07	x
10	61111057000	RELAY CM1A-R-12V-H80 07	1
11	69011040000	END PLUG CAN-BUS 08	1
12	000700000BH	SPARE CONNECTOR BH 6-PINS	1
13	50311060200	DC HORN 12V 07	1
14	78011061000	HORN BRACKET EXC 08	1
15	0125050003	WASHER DIN0125-A 5,3	1
16	0934050003	HEXAGON NUT DIN0934-M 5	1
17	44611207200	FLASHER UNIT 97	1
18	58211031100	BRACKET FOR FLASHER RELAISE	1
19	44011076100	CABLE TIE 100/2,5MM BLACK	x
19	44011076200	CABLE TIE 200/3,6MM BLACK	x
19	44011076305	CABLE TIE 300/4,8MM BLACK	x
20	50311050100	BRAKE LIGHT SWITCH FRONT 2002	1
21	54211052000	CLAMP RSGU 24/15	1
22	58411096100	DIODE S3H-15 97	1
23*	49111425200	BULB 12V 2,3W (W2X4,6D)	3

108121110 / C108121110

* NEW PART

X AS REQUIRED

HAND BRAKE CYLINDER

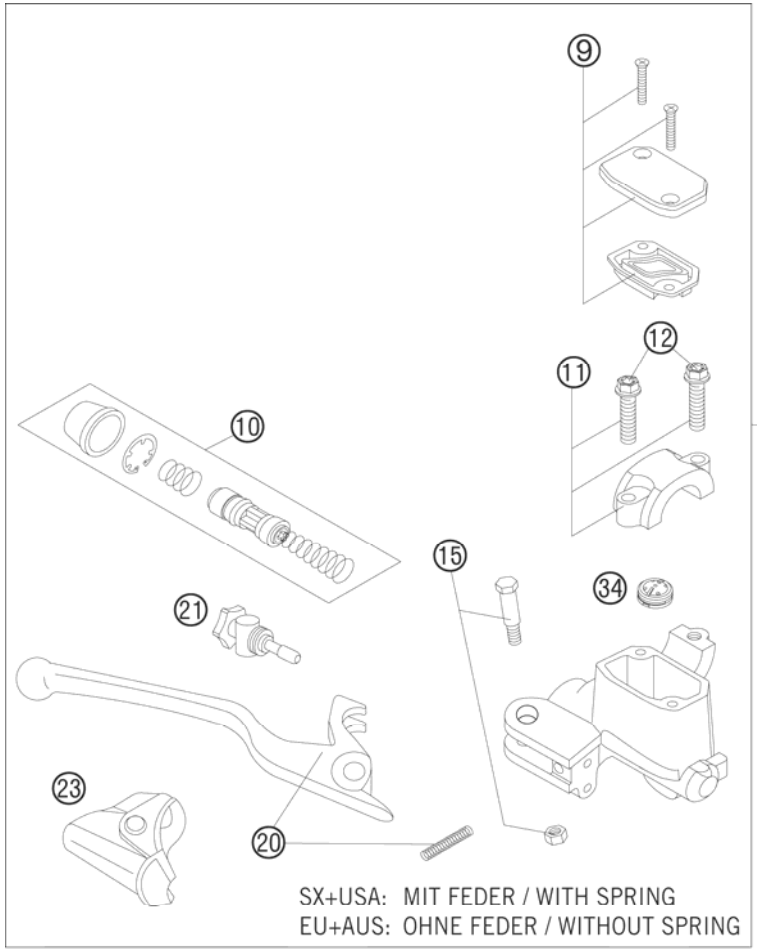

FIG	PART NUMBER	DESCRIPTION	QTY
1	77013001144	HAND BRAKE CYLINDER CPL.EXC 09	1
9	50313003000	HANDBRAKE CYL.COVER CPL.NATURE	1
10	54813008300	REP.SET PISTON D=12MM 2009	1
11	50313005000	CLAMP CPL. NATURE	1
12	0025060256	HH COLLAR SCREW M6X25 TX30	2
15	50313006100	LEVER SCREW CPL. 2001	1
20	54813002200	HAND BRAKE LEVER + SPRING 2009	1
21	54813007300	ADJUSTING SCREW CPL. SX 2009	1
23	50313004000	PROTECTION CAP HAND BRAKE CYL.	1
30	59013011000	BRAKEHO. FRONT 1300MM 2000	1
31	54813020200	BANJO SCREW 08	1
32	0603100141	COPPER GASKET DIN7603-10X14X1	2
34	54802051000	VALVE	1
80	00062030000	BRAKE FLUID DOT5.1 0,25L	1

097701310 / C098121310

* NEW PART

X AS REQUIRED

REAR BRAKE CONTROL

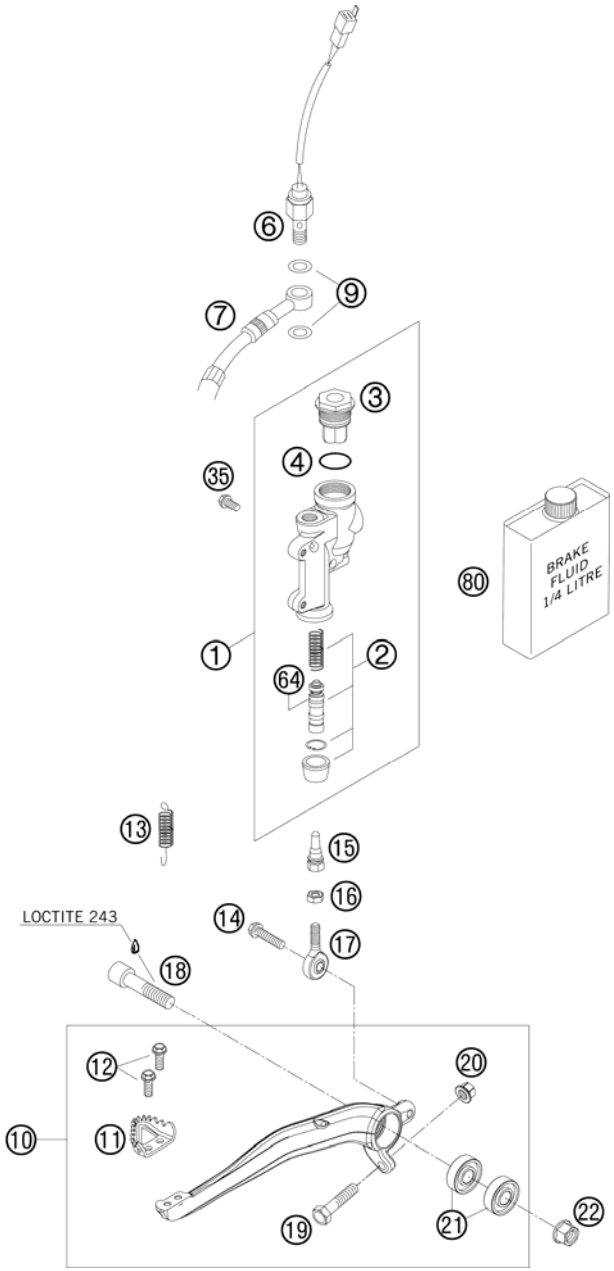

FIG	PART NUMBER	DESCRIPTION	QTY
1	54813060100	REAR BRAKE CYLINDER CPL. 2004	1
2	54813061200	REPAIR KIT PISTON 13MM 06	1
3	54813062100	REAR BRAKE CYL. COVER CPL. 04	1
4	54813063000	FOOT-BRAKE CYL. GASKET SX 03	1
6	50311051100	BRAKE LIGHT SWITCH REAR '98	1
7	54813070000	BRAKE HOSE REAR 655MM 03	1
9	0603100141	COPPER GASKET DIN7603-10X14X1	2
10	78013050044	FOOT BRAKE LEVER CPL.	1
11	54813051000	STEP PLATE FOR BRAKE LEVER	1
12	0025050126	HH COLLAR SCREW M5X12 TX30	2
13	54603062000	RETURN SPRING FOR BRAKE LEVER	1
14	0025060206S	HH COLLAR SCREW M6X20 TX30	1
15	54813056000	PUSH ROD L=28MM 03	1
16	0985060003	SELF LOCK. NUT DIN0985-M 6	1
17	54813055000	SWIVEL HEAD KA6 03	1
18	0912100406	AH SCREW DIN6912 M10X40 10.9	1
19	59001037000	SPECIAL SCREW M8X26 WS=10	1
20	46030045000	COLLAR NUT M8 WS=10	1
21	0625060002	BALL BEARING SKF 6000-2RS1	2
22	54630044000	COLLAR NUT M10 WS=13	1
35	0025060126	HH COLLAR SCREW M6X12 TX30	2
64	54813064200	BELLOWS FOR REPAIR KIT 06	1
80	00062030000	BRAKE FLUID DOT5.1 0,25L	1

098121330 / C098121330

* NEW PART

X AS REQUIRED

BRAKE CALIPER FRONT

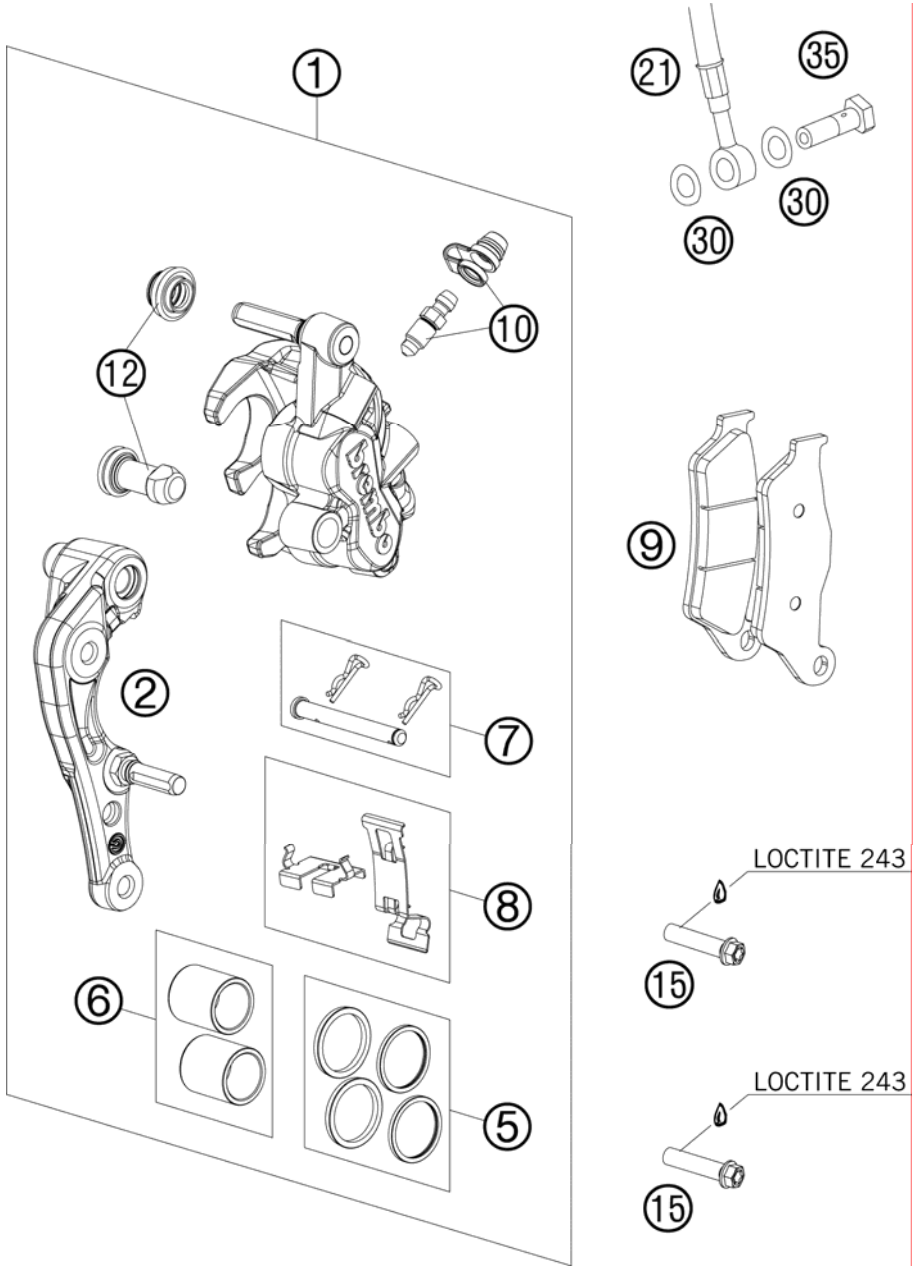

FIG	PART NUMBER	DESCRIPTION	QTY
1	7701301500101	CALIPER NAT. WITHOUT PADS	1
2	77013014000	BRAKE CALIPER SUPPORT FRONT 09	1
5	77013021000	REP. KIT SEALS 24MM	1
6	77013019000	REP. KIT PISTON 24MM	1
7	77013017000	BOLT CPL. 09	1
8	77013018000	RETAINING PLATE SET BREMBO	1
9	77013020000	BRAKE PADS TOYO B153	1
10	61013020100	BLEEDER SCREW WITH CAP	1
12	54613218000	CUP SET SHORT	1
15	0025080356S	HH COLLAR SCREW M8X35 TX40	2
21	59013011000	BRAKEHO. FRONT 1300MM 2000	1
30	0603100141	COPPER GASKET DIN7603-10X14X1	2
35	50213025000	HOLLOW SCREW M10X1X19	1

097701361 / C098121360

* NEW PART

X AS REQUIRED

BRAKE CALIPER REAR

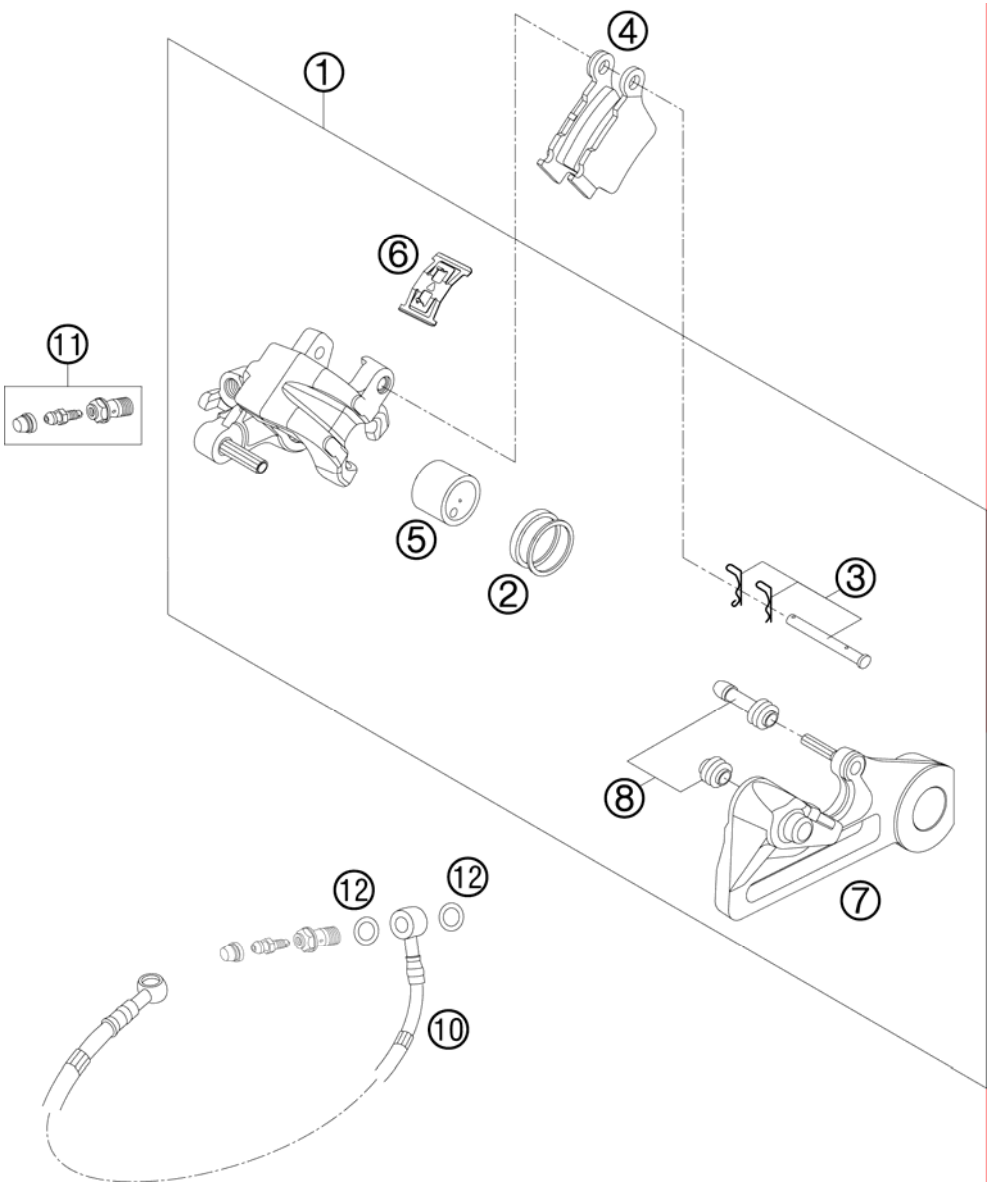

FIG	PART NUMBER	DESCRIPTION	QTY
1	54813080101	BRAKE CAL. RE. - WITHOUT PADS	1
2	50313081200	REPAIR KIT SEALING RINGS 26MM	1
3	54813082000	BOLT SET FOR BRAKE CALIPER 03	1
4	54813090300	BRAKE PAD SET REAR TOYO	1
5	54813083000	BRAKE PISTON 26MM 2003	1
6	54813018000	RETAINING SPRING SET 2003	1
7	54813075000	BRAKE CALIPER SUPPORT REAR	1
8	54613218000	CUP SET SHORT	1
10	54813070000	BRAKE HOSE REAR 655MM 03	1
11	62513020000	BLEEDER SCREW CPL. 05	1
12	0603100141	COPPER GASKET DIN7603-10X14X1	2

095031390 / C098121390

* NEW PART

X AS REQUIRED

LIGHTING SYSTEM

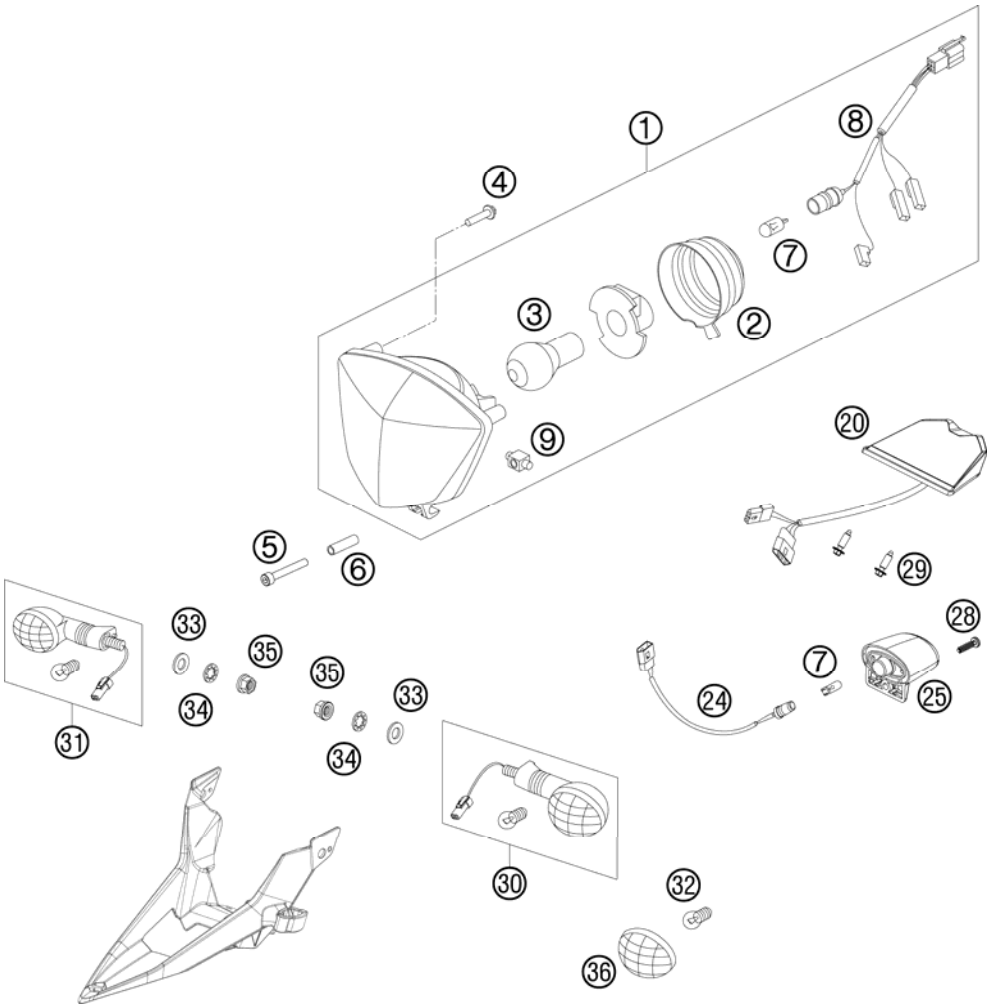

FIG	PART NUMBER	DESCRIPTION	QTY
1	81214001000	HEAD LIGHT	1
2	54814001050	RUBBER CAP FOR HEAD LIGHT 05	1
3	44111038000	BILUX-BULB 12V 35/35W BA20D	1
4	0081500181	SCREW FOR PLASTIC D=5X18	4
5*	0912050353	AH SCREW DIN912 M5X35	1
6	81208008000	DIST. HOSE F. HEAD LIGHT MASK	1
7	49011435100	BULB 12V 5W (W2,1X9,5D) PHIL.	2
8	54811001050	CABLE FOR HEAD LIGHT 2005	1
9	81208003010	INSERT FOR HEAD LIGHT SUPPORT	1
20*	76514040000	REAR LIGHT	1
24*	81211093000	WIRING HARNESS NUM.PLATE LIGHT	1
25	75014047000	LICENSE PLATE ILLUMINATION 07	1
28	0081250181	SCREW FOR PLASTIC 50X18 T20	1
29	0017060203	EJOT PT SCREW K60X20 WS=6	2
30	54814025100	FLASHER CPL.FRONT L/S REAR R/S	2
31	54814026100	FLAHER CPL. FRONT R/S REAR L/S	2
32	44111015100	BULB 12V 10W (BA15S)	2
33	0125100003	WASHER DIN0125-A10,5	2
34	0797100003	LOCK WASHER DIN6797-J10,5 ZI	2
35	58414030000	HH COLLAR NUT M10X1,25 WS=13	2
36	54814028000	FLASHER LENS L/S R/S 05	2

108121410 / C108121410

* NEW PART

X AS REQUIRED

INSTRUMENTS / LOCK SYSTEM

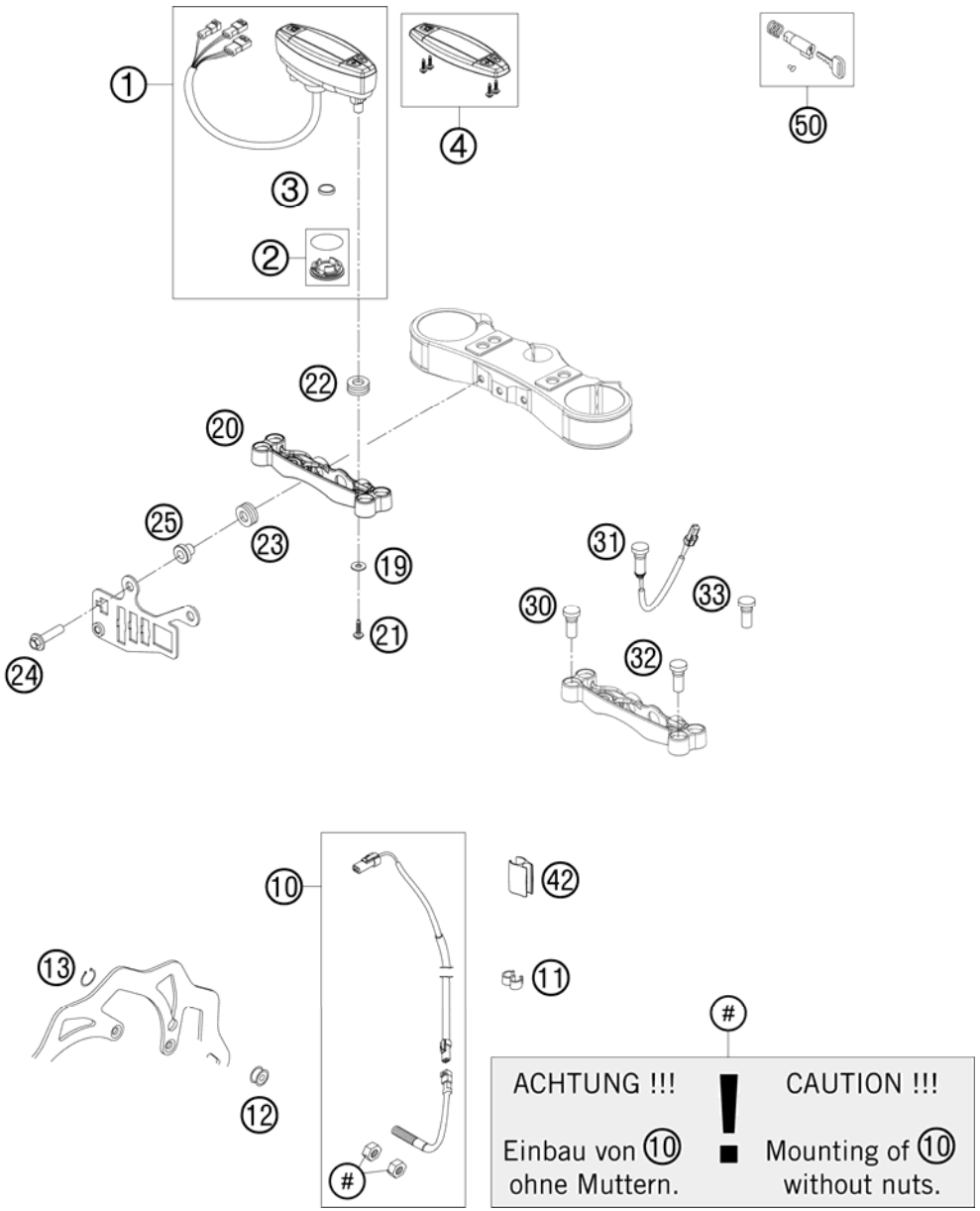

FIG	PART NUMBER	DESCRIPTION	QTY
1	54814069000	SPEEDOMETER KM/H F. 21" 2005 REPROGRAMMABLE: KM/H - MPH	1
2	54814069010	BATTERY COVER F. SPEEDOM. 2005	1
3	58314068000	BATTERY F. SPEEDOM. M.A.E. 02	1
4	54814069020	SPEEDOMETER TOP PART 05	1
10	54814068100	CABLE FOR DIGITAL SPEEDOM. 06	1
11	55011022100	CLAMP D=6/8MM, BLACK	2
12	54814069050	MAGNET FOR DIGITAL SPEEDOM. 03	1
13	0471009104	CIRCLIP DIN0471- 9X1 INOX	1
19	0021050003	WASHER DIN9021-A 5,3	2
20*	81214060000	SPEEDOMETER BRACKET	1
21	0081050121	SCREW FOR PLASTIC K50X12 T20	2
22	58214069051	RUBBER GROMMET 16X10,8X3 02	2
23	31008060000	RUBBER SLEEVE D=8MM OPEN	2
24	0024060256	HH COLLAR SCREW M6X25 TX30	2
25	59030060050	BUSHING F. SPROCKET COVER RAC.	2
30	58011024300	FLASHER INDICAT.LIGHT GREEN'98	1
31*	81214083000	INDICATOR LIGHT LED YELLOW FI	1
32	58011021300	H.BEAM INDICATOR LIGHT BLUE'98	1
33*	81214086000	INDICATOR LIGHT RESERVE	1
42	54813026000	CABLE SUPPORT 10/6MM 06	2
50	78003035000	STEERING HEAD LOCK 08	1

108121430 / C108121430

* NEW PART

X AS REQUIRED

ACCESSORIES KIT

0

OHNE ABBILDUNG
WITHOUT ILLUSTRATION

1

TECHNISCHE DOKUMENTATION
TECHNICAL DOCUMENTATION
DOCUMENTACION TECNICA
DOCUMENTATION TECHNIQUE
NOTE TECNICHE

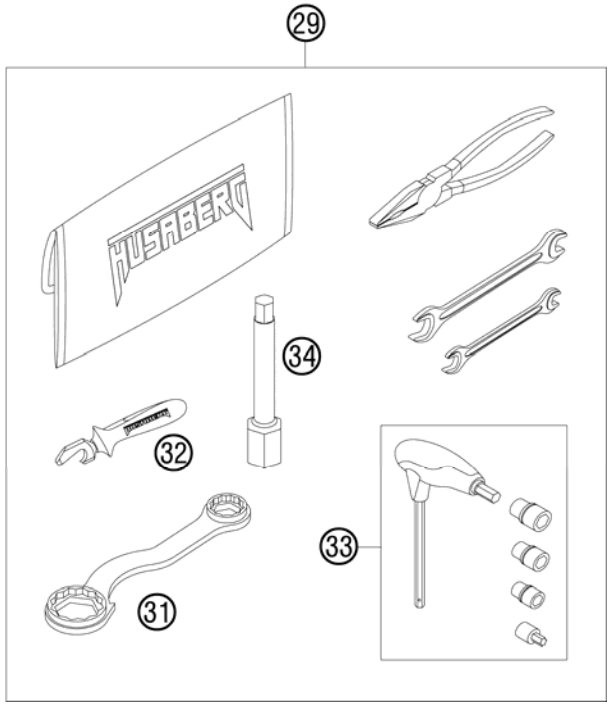

FIG	PART NUMBER	DESCRIPTION	QTY
0	0019080206S	FLAT HEAD SCREW M. ISA45 M8X20	2
0	0019080266S	COUNTER-SUNK SCREW ISA45 M8X26	6
0	0021060003	WASHER DIN9021-A 6,4	1
0	0025060356	HH COLLAR SCREW M6X35 TX30	1
0	0125050003	WASHER DIN0125-A 5,3	3
0	06923080003	HEXAGON NUT DIN EN1661 M8 SW13	6
0	0912050063	AH SCREW DIN 912 M 5X6	1
0	0966050203	OVAL HEAD SCREW DIN0966-M 5X20	2
0	0985050003	SELF LOCKING NUT DIN0985-M 5	2
0	40006006000	WASHER 6MM	2
0	44011076200	CABLE TIE 200/3,6MM BLACK	1
0	50302044000	CLAMP FOR MIRROR CPL. 09	1
0	5030314013390	FOOTPEG L.+R. CPL. 03	1
0	58012040000	REAR MIRROR L/S	1
0	58012040150	CLAMP FOR MIRROR '94	1
0	58012140000	REAR MIRROR R/S	1
0	58310151052	REAR SPROCKET 52-T	1
0	58412080000	REFLECTOR RED LC4 '98	1
0	58412080050	BRACKET FOR REFLECTOR	1
0	78010165118	CHAIN DID 118 ROLLS	1
0	81202002000	FATBAR PAD HUSABERG 09	1
0	81203190000	ENGINE GUARD	1
0	81206016000	FILTER SUPPORT HUSABERG 09	1
0	81212002000	BAG HUSABERG	1
0	H38090110	HUSABERG BALLPOINT PEN	1
1*	3802017EN	OWN.MAN. FE-FC390/450/570 2010	1
1*	3CF2403J3EN	SPC CHASSIS FE 570 2010	1
1*	3CM090035JEN	SPC ENGINE 570 FE 2010	1
29	81229099000	TOOL SET 2009	1
31	50329080100	WRENCH SW=17/21/27/32 B&F	1
32	81229071000	OPENER HUSABERG	1
33	60029070200	T-WRENCH WS=6/8/10 TX=45 B&F	1
34	78029072000	SPARK PLUG SOCKET	1

098122001 / C108172001

* NEW PART

X AS REQUIRED

NOTICE

NOTICE

NOTICE

KTM Group Partner

3CF2403J3EN

Art.Nr.: 3CF2403J3EN 5/2009

HUSABERG – a company of the KTM Group

A-5230 Mattighofen

www.husaberg.cc